PIONEER

Service Manual

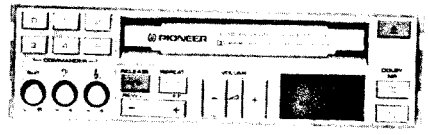

0-8

ORDER NO.
CRT-444-0

COMPONENT CAR STEREO CASSETTE DECK

KP-007

EW

SPECIFICATIONS

General

Power source	DC 14.4V (10.8～15.6V allowable)
Grounding system	Negative type
Dimensions	180(W)×50(H)×150(D)mm
Weight	1.7kg
Tone controls (bass)	±10 dB (100Hz)
(treble)	±10 dB (10kHz)
Maximum output level	200mV
Output impedance	1kΩ

Tape Player

Tape	Compact cassette tape (C-30～C-90)
Tape speed	4.76cm/sec. (+0.14cm/sec., −0.05cm/sec.)
Fast forward/rewind time	Approx. 100 sec. for C-60
Wow & flutter	0.09% (WRMS)
Frequency response	Metal: 30～20,000Hz (±3 dB)
	Normal: 30～16,000Hz (±3 dB)
Stereo separation	45 dB
Signal-to-noise ratio	Dolby NR IN: 63 dB (IEC-A network)
	Dolby NR OUT: 55 dB (IEC-A network)

Note:
Specifications and the design are subject to possible modification without notice due to improvements.

- 'Dolby' and the double-D symbol are trademarks of Dolby Laboratories Licensing Corporation.
- Noise Reduction System manufactured under license from Dolby Laboratories Licensing Corporation.

PIONEER ELECTRONIC CORPORATION 4-1, Meguro 1-Chome, Meguro-ku, Tokyo 153, Japan
PIONEER ELECTRONICS [USA] INC. P.O. Box 1760, Long Beach, California 90801 U.S.A.
TEL: [800] 421-1404, [800] 237-0424
PIONEER ELECTRONIC [EUROPE] N.V. Keetberglaan 1, 2740 Beveren, Belgium TEL: 03/775-28-08
PIONEER ELECTRONICS AUSTRALIA PTY. LTD. 178-184 Boundary Road, Braeside, Victoria 3195, Australia
TEL: [03] 580-9911

EK © JUNE 1984 Printed in Japan

CONTENTS

1. PARTS LOCATION 1
2. NOMENCLATURE AND USE 2
3. CONNECTING THE UNITS 3
4. DISASSEMBLY 3
5. CIRCUIT DESCRIPTION 5
6. ADJUSTMENT
   6.1 Tape Speed Adjustment 11
   6.2 Head Azimuth Adjustment 11
   6.3 Dolby NR Level Adjustment 11
   6.4 Electronic Volume Control Adjustment 12
7. SCHEMATIC CIRCUIT DIAGRAM 17
8. CONNECTION DIAGRAM 20
9. CABINET EXPLODED VIEW 24
10. CHASSIS EXPLODED VIEW 25
11. CASSETTE MECHANISM EXPLODED VIEW 28
12. ELECTRICAL PARTS LIST 31
13. PACKING METHOD 34

1. PARTS LOCATION

NOTE:

- *For your Parts Stock Control, the fast moving items are indicated with the marks ★ ★ and ★.*
  ★ ★: GENERALLY MOVES FASTER THAN ★.
  This classification shall be adjusted by each distributor because it depends on model number, temperature, humidity, etc.

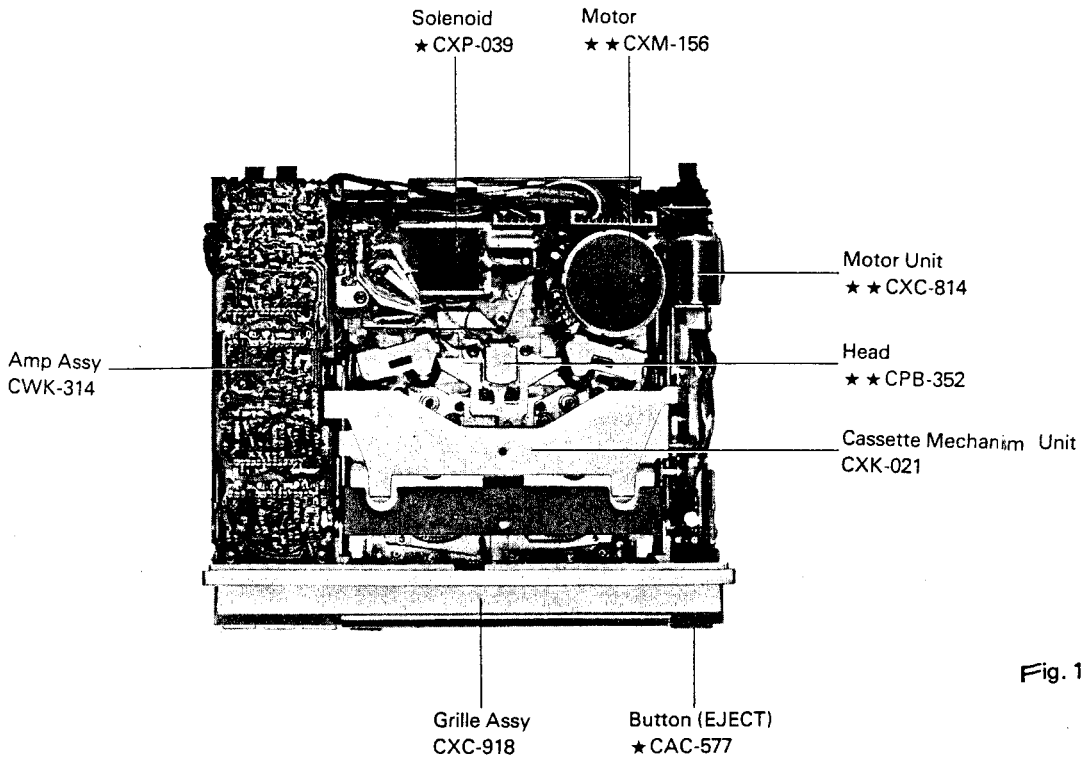

Fig. 1

QUESTIONNAIRE

MODEL _____

One Model per questionnaire

Dear Servicer,

Thank you for your cooperation in the post-sale service of Pioneer products.

This questionnaire is used as a tool to improve the serviceability of our products and service manuals. Please evaluate this model and service manual by answering the following questions. Your ideas may be realized in our future products. Your answers will be appreciated. Thank you.

PIONEER ELECTRONIC CORP.

T. Nakagawa, Manager, Service Section, International Division

1. SERVICING EVALUATION	Circle applicable number:	Good		Fair		Poor
a. Disassembly/Re-assembly:		1	2	3	*4	*5
b. Circuit Checks:		1	2	3	*4	*5
c. Replacement of Parts:		1	2	3	*4	*5
d. Adjustment (s):		1	2	3	*4	*5

* If (4) or (5) was circled, please be specific.

e. Your advice, opinion or ideas related to servicing this product.

2. SERVICE MANUAL EVALUATION

a. Circuit & Mechanism Description

b. Circuit Diagram

3. OTHER

Please describe other areas of servicing which you may find difficult.

Completed by :

Date :

Company Name :

Address :

City/State/Zip :

Please send this form filled to the distributor in your country.

2. NOMENCLATURE AND USE

❶ Command Button

Press the command button to set the number of recorded selections to be skipped or to set the number of times a piece is to be repeated.

❷ Program Switching/Release Button

Press this button to switch from side A to side B and vice versa. Also, you can press this button to cancel music search, repeat, skip search, and fast forward or rewind while the functions are operating.

❸ Music Repeat Button

Press this button to hear the piece you are listening to as many times as you wish. Also, with the repeat command set, the piece will play as many times as the number you have set. To cancel music repeat, press the release button or music repeat button one time.

❹ Cassette Insert Slot

Insert the tape side of a cassette into the slot and the deck will set the cassette automatically. At this time, the tape running display above the tape is always (◀) which indicates normal direction.

❺ Display

❻ Eject Button

Press this button to eject the cassette.

❼ Dolby NR Button

Press this button to play a tape recorded on a Dolby NR system. (DD will light up on the display.)

❽ Attenuator Button

Press this button and volume level decreases instantaneously to 1/10 of the original volume. Press the button again and volume returns to the original level.

❾ Volume Increase Button (+)
Volume Decrease Button (−)

Press the (+) side to increase volume (soft → loud) or the (−) side to decrease volume (loud → soft). The button has 31 levels for adjustment. Each time you press the button, the volume level increases or decreases accordingly. Hold the button and the volume will increase or decrease continuously.

❿ Fast Forward Button (+)/Rewind Button (−)

Press the (+) side for fast forward or the (−) side for rewind. For music search, press this button twice.

⓫ Treble Control

⓬ Bass Control

⓭ Balance Control

- When performing the adjustments outlined in ⓫ through ⓭ press the button so that it is in the ▬ position. After adjustment, press the button again so that it is in the ▬ position.
- All the press type control buttons have an electronic sound (beep) and display for dual checking to confirm operation.
- Noise reduction manufactured under license from Dolby Laboratories Licensing Corporation. "Dolby" and the double-D symbol are trade marks of Dolby Laboratories Licensing Corporation.

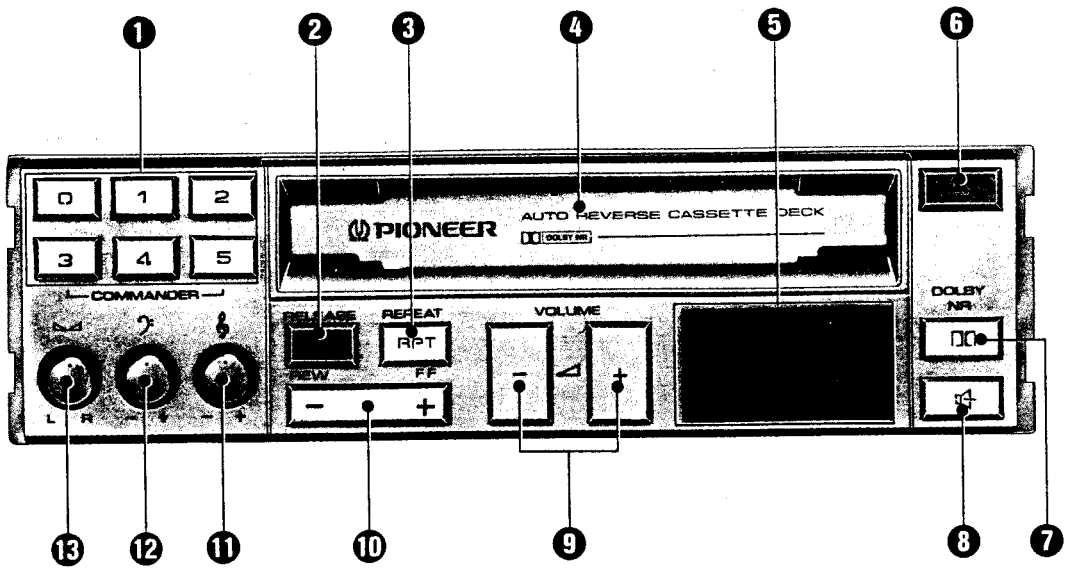

Fig. 2

3. CONNECTING THE UNITS

- Before making final connections, make temporary connections then operate the unit to check for any connecting cord problems.
- Refer to the instruction manual for details on connecting the various cords of the main amp and tuner then make connections correctly.
- Be sure to correctly connect the memory power supply lead (orange) as specified. If the connection is made incorrectly or forgotten, this unit will not work at all.

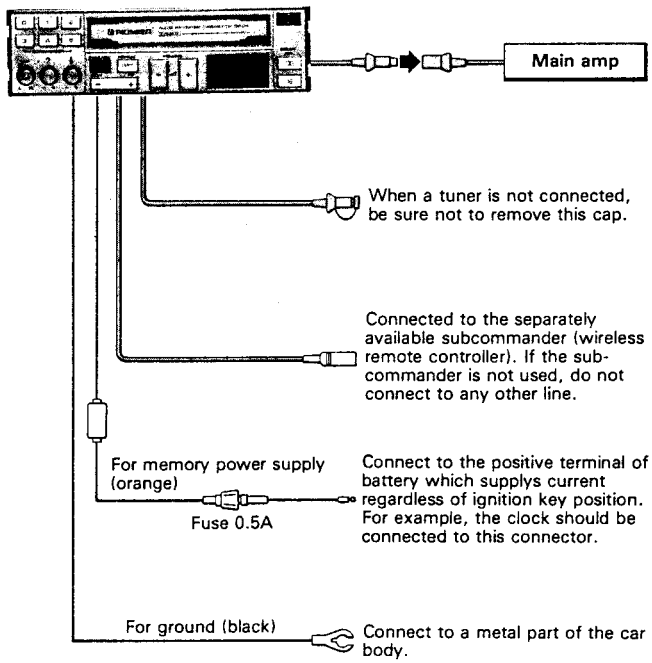

Fig. 3

4. DISASSEMBLY

• Removing the Case

1. Remove the 6 screws, and then remove the case.

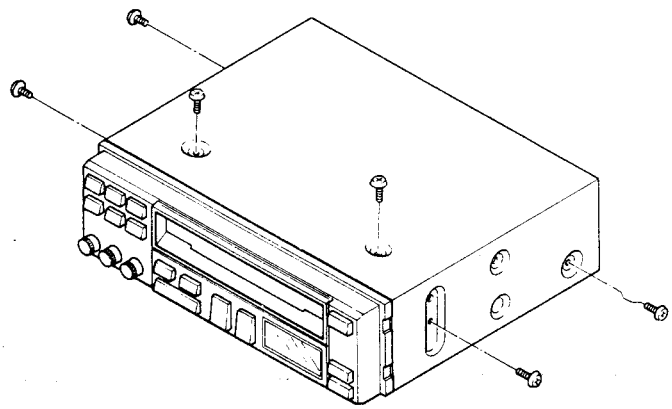

Fig. 4

• Removing the Grille Unit

1. Remove the 2 screws, and then remove the grille unit.

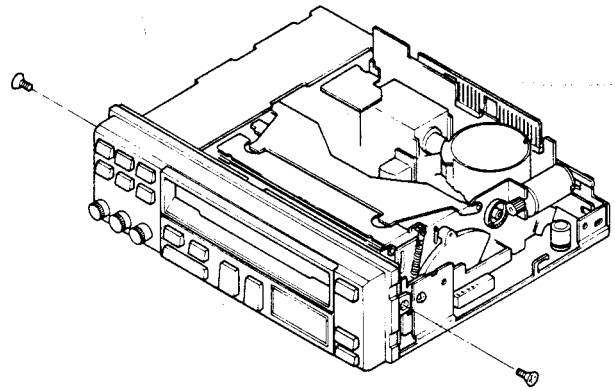

Fig. 5

• Removing the Cassette Mechanism Assembly

1. Remove the 4 screws, and then remove the cassette mechanism assembly.

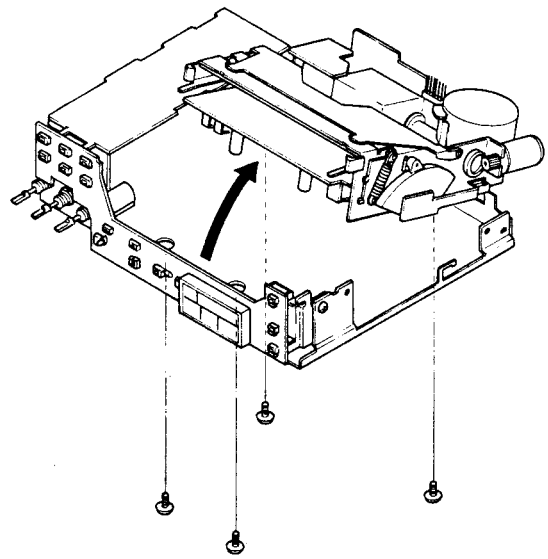

Fig. 6

• Removing the Chassis

1. Remove the 4 screws, and then remove the chassis.

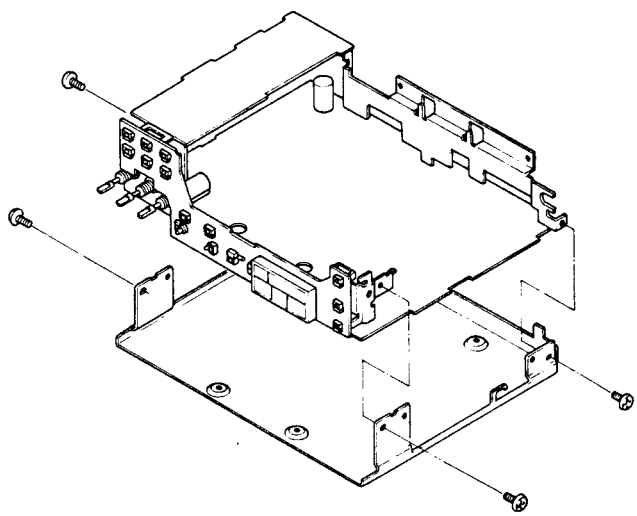

Fig. 7

5. CIRCUIT DESCRIPTION

• **Block Diagram**

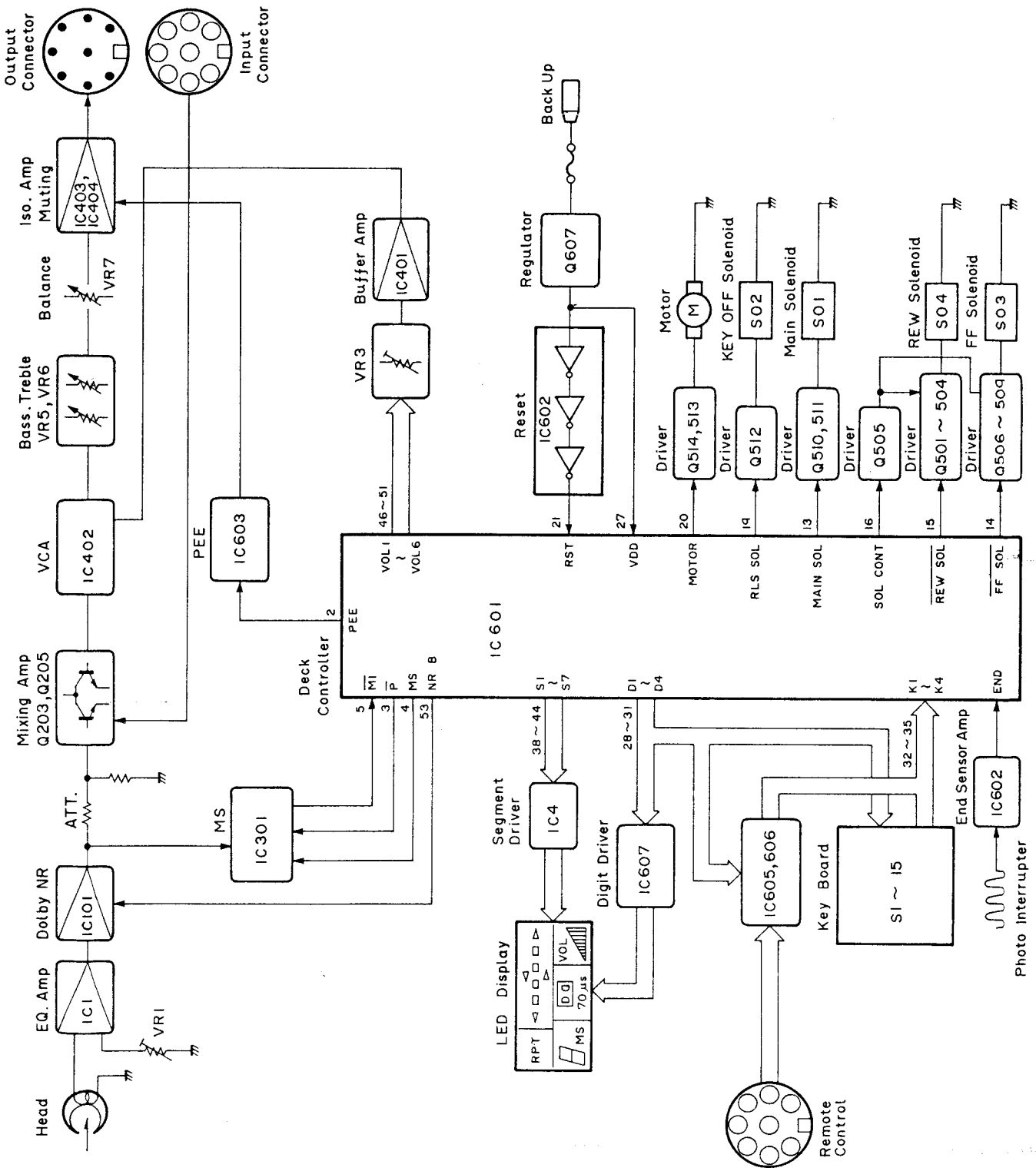

Fig. 8

• Level Diagram

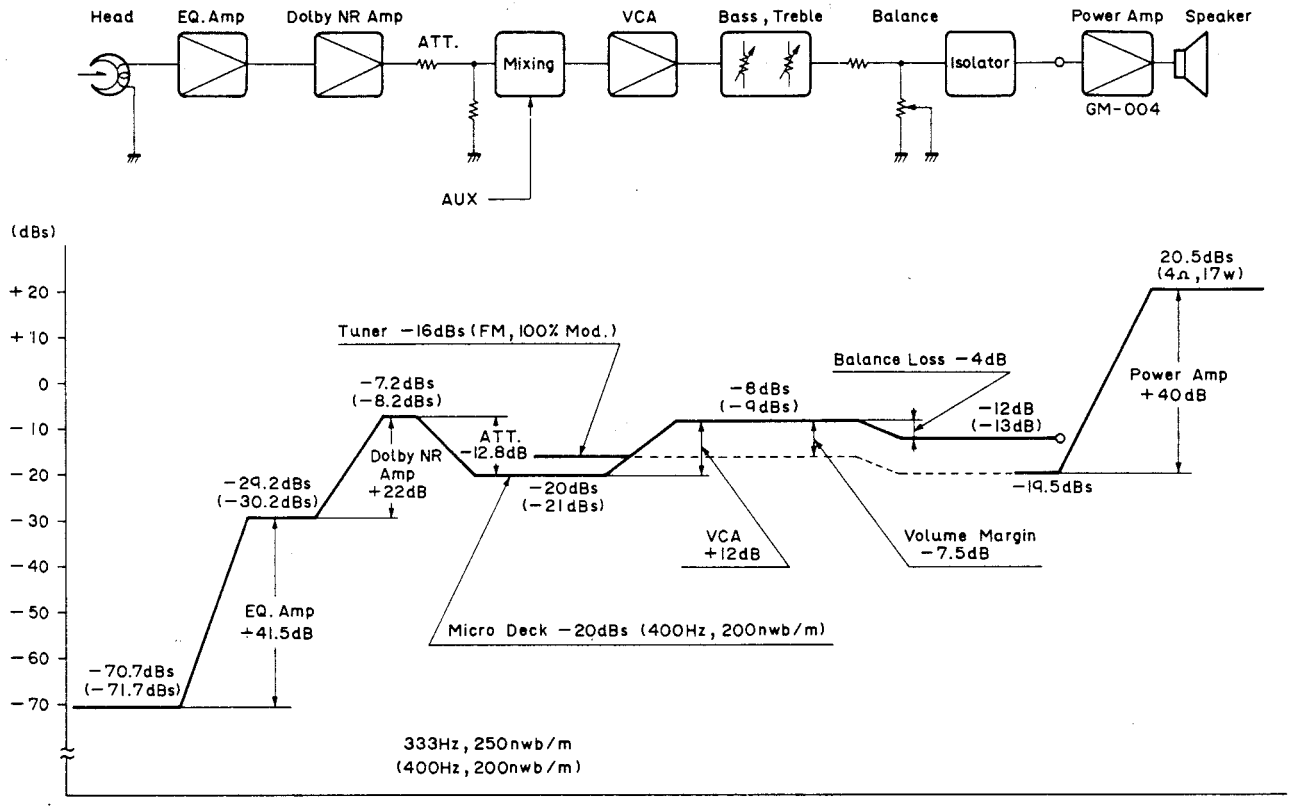

Fig. 9

• Electronic Volume Control Circuit

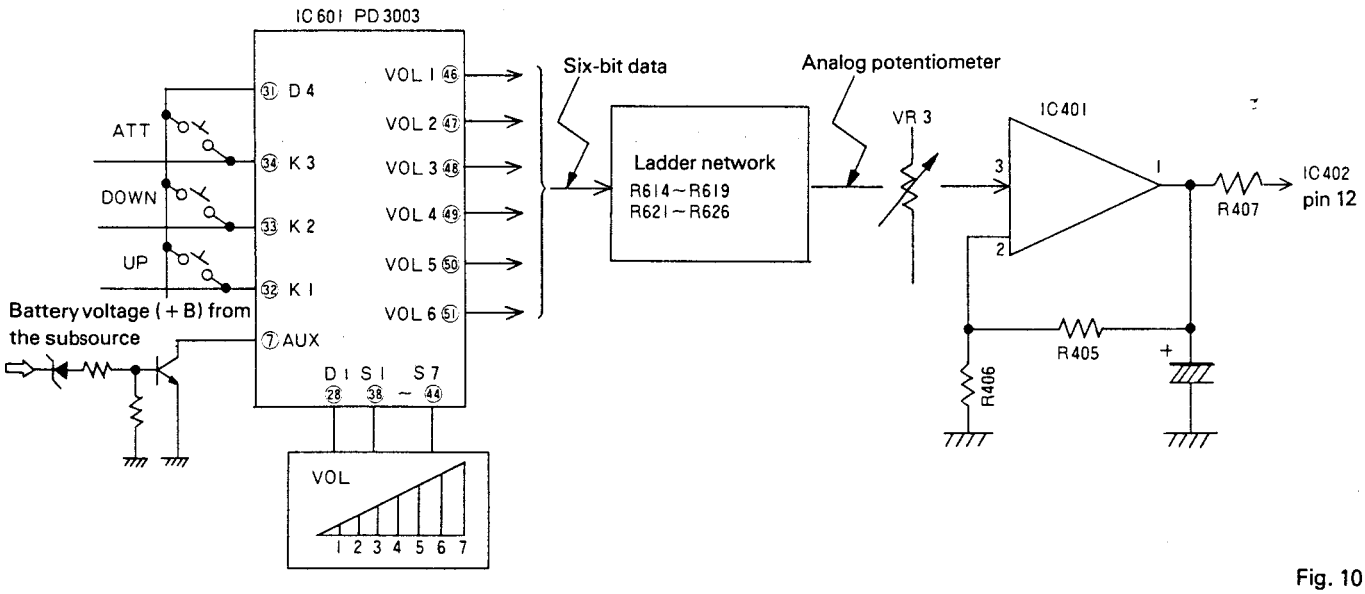

Fig. 10

The D-A converter operates only when the tape deck is in operation or the AUX pin of the IC601 is low. Because when using a subsource, such as tuner and micro-deck, the electronic volume control is used regardless of the deck's conditions, the AUX pin is always low.
The UP and DOWN keys let pins VOL0 to VOL6 of IC601 output 6-bit data. The data is then converted into an analog voltage value through a ladder network. Pressing of the ATT key outputs a value that is less than the previous 6-bit value by 10 decimals). Each pressing of the UP or DOWN key produces one step. When pressed for 0.5 seconds or more, UP and DOWN can be repeated continuously.

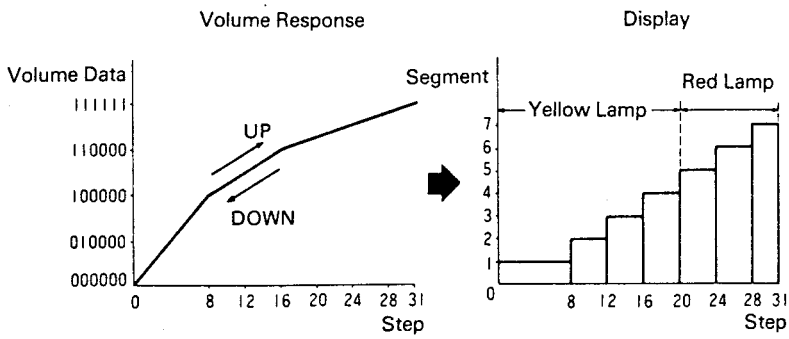

Fig. 11

The control signal converted into an analog voltage then passes through VR3, and is amplified 1.56 times (= 1 + R405/R406) at buffer IC401. The signal is then fed via R407 to VCA and pin 12 of IC402. The gain of VCA can be adjusted using VR3.

IC402: PA0005

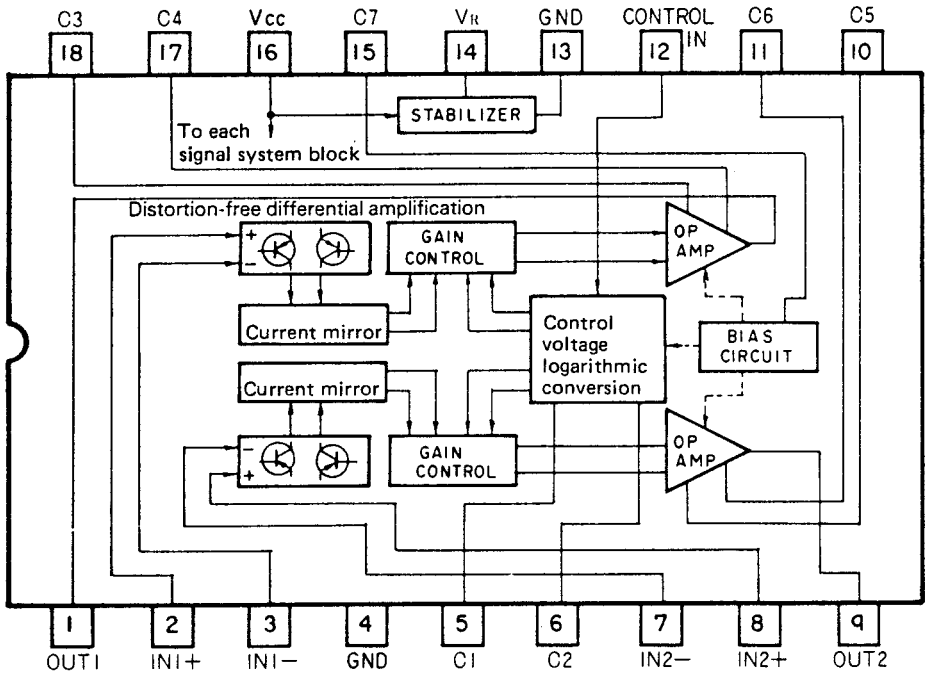

Fg. 12

See the internal block diagram of IC402 (PA0005). Signals are input from pin 2 (L channel) and pin 8 (R channel), amplified by a distortion-free differential amplifier, and fed to the gain control circuit, which is connected by current mirror. Gain control is achieved by changing the ratio of currents flowing through the transistors of the differential amplifier. The control signal applied to this circuit is obtained through logarithmic conversion of the voltage of pin 12. Thus the attenuation value is proportional to the logarithmic value of the pin 12 voltage.

• Operation

1. Backup → ACC on → Insert cassette → Ejection

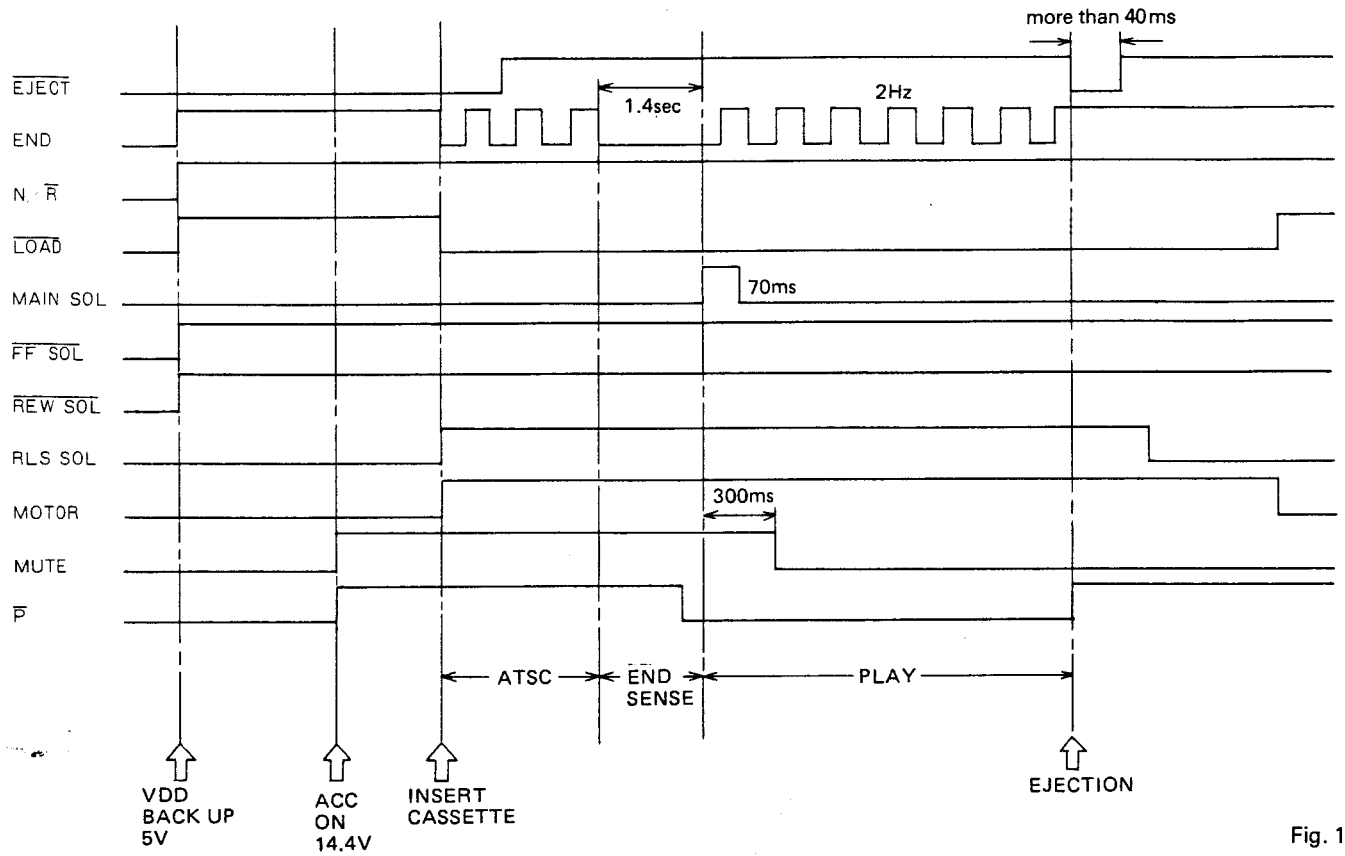

Fig. 13

Application of the backup voltage (5V) turns the END, N/$\overline{R}$, $\overline{LOAD}$, $\overline{FF\ SOL}$, and $\overline{REW\ SOL}$ pins of IC601 (PD3003) to high. Then, following ACC ON, the MUTE and $\overline{P}$ pins go high. If a cassette is inserted while in this state, $\overline{LOAD}$ immediately goes low, and RLS SOL and MOTOR go high. This activates the PLAY function of the cassette deck. After the motor starts rotating, pulses (2Hz, $5V_{p\text{-}p}$) are fed to the END pin until all tape slack is eliminated. This is called the ATSC operation. When the ATSC operation is completed, i.e., when no pulse is generated for 1.4 seconds or more, the main solenoid pulls, completing the END sense operation. Then in 300 msec muting is cancelled. During this the 2Hz pulses are always applied to the END pin to continue the play mode.
The eject operation is initiated by holding $\overline{EJECT}$ low for 20 msec or more. The P pin immediately goes high, the RLS solenoid is released, and the head is moved backward. Upon ejection of the cassette tape, $\overline{LOAD}$ becomes "off", and the motor stops.

2. END sense → Autoeject

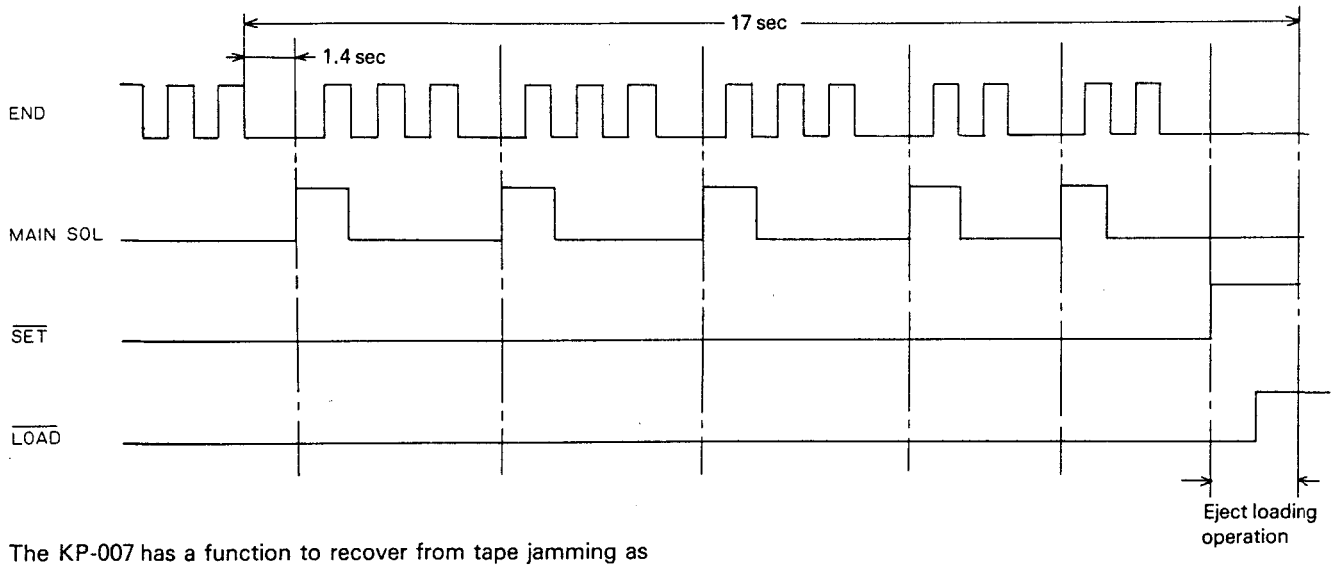

Fig. 14

The KP-007 has a function to recover from tape jamming as follows: When END Sense is detected six times in 17 seconds, which is a sympton of tape jamming, the cassette deck automatically ejects the tape.

3. Loading operation

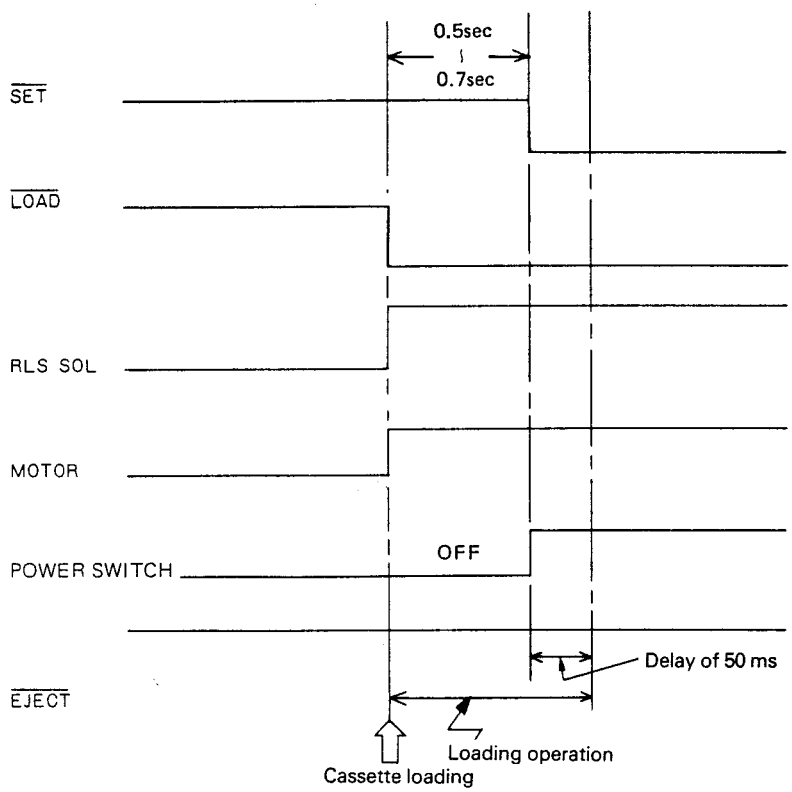

Fig. 15

When a cassette tape is loaded, $\overline{\text{LOAD}}$ immediately goes low; loading operation starts, the RLS solenoid pulls, and the capstan motor starts rotating. Normally, 0.5 to 0.7 seconds after loading begins, the $\overline{\text{SET}}$ pin goes low. But in order to load the tape correctly, the termination of the loading operation is delayed by 50 msec. When $\overline{\text{SET}}$ goes low, the cassette deck is turned on, and power is supplied to the pre-Dolby NR unit.

4. Eject loading operation

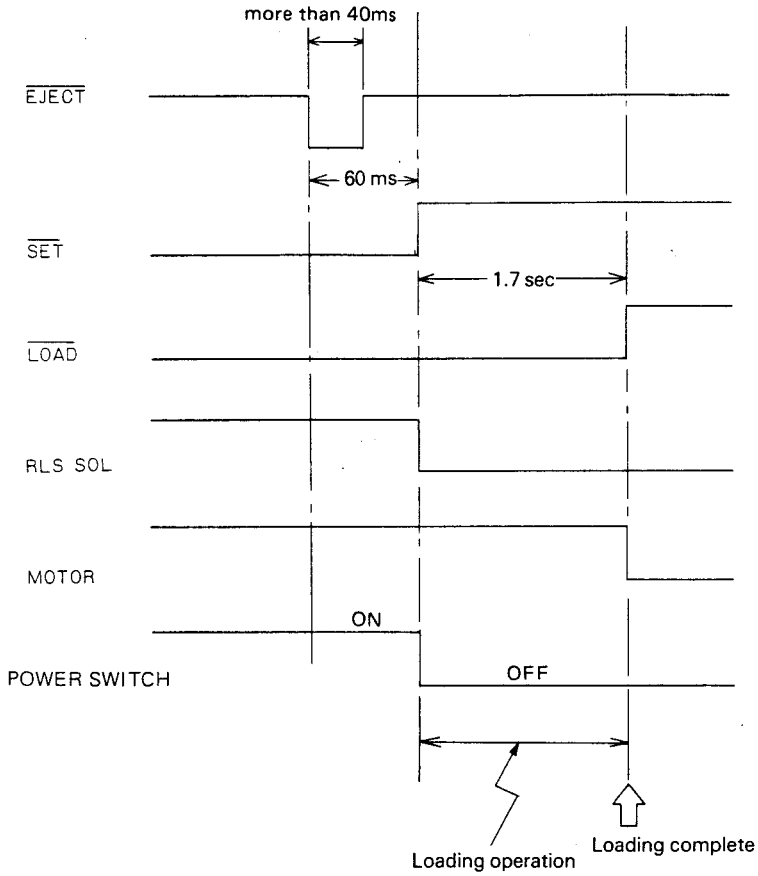

Fig. 16

About 60 msec after the $\overline{\text{EJECT}}$ pin goes low (for at least 20 msec), eject loading starts: the RLS solenoid is released, the power is turned off, the $\overline{\text{SET}}$ pin becomes "off" and about 1.7 second later the $\overline{\text{LOAD}}$ pin becomes "off". This completes the loading operation.

6. ADJUSTMENT

6.1 TAPE SPEED ADJUSTMENT

• To Adjust

1. Playback STD-301 (3kHz, −10 dB) and adjust semi-fixed volume so that the frequency counter shown 3,000Hz (+90Hz, −30Hz).

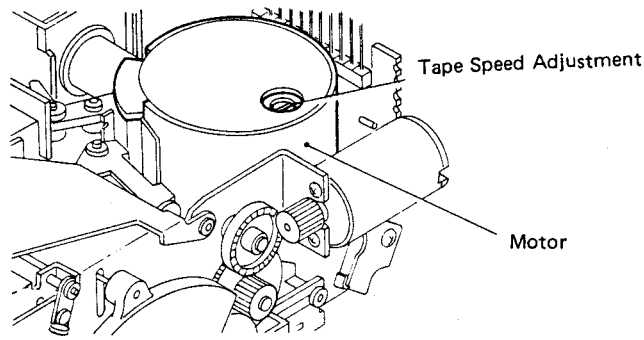

Fig. 17

6.2 HEAD AZIMUTH ADJUSTMENT

• To Adjust

1. Playback STD-341A (10kHz, −20 dB) and adjust the azimuth to obtain maximum output for both forward and reverse directions.

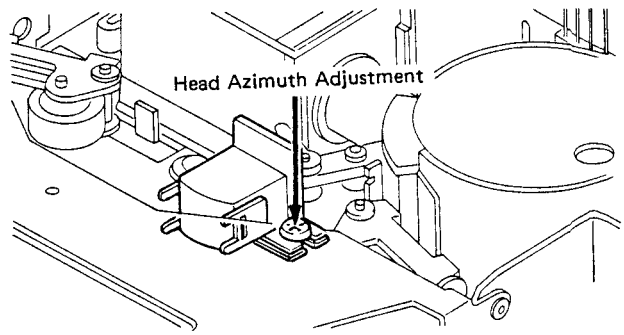

Fig. 18

6.3 DOLBY NR LEVEL ADJUSTMENT

• To Adjust

1. Playback the 400Hz, 200nwb/m portion of CT-150, and adjust VR1 (left channel) and VR2 (right channel) to obtain a mV meter reading of 300mV (−8.24 dBs).
   The adjusting accuracy is ±1 dBs.

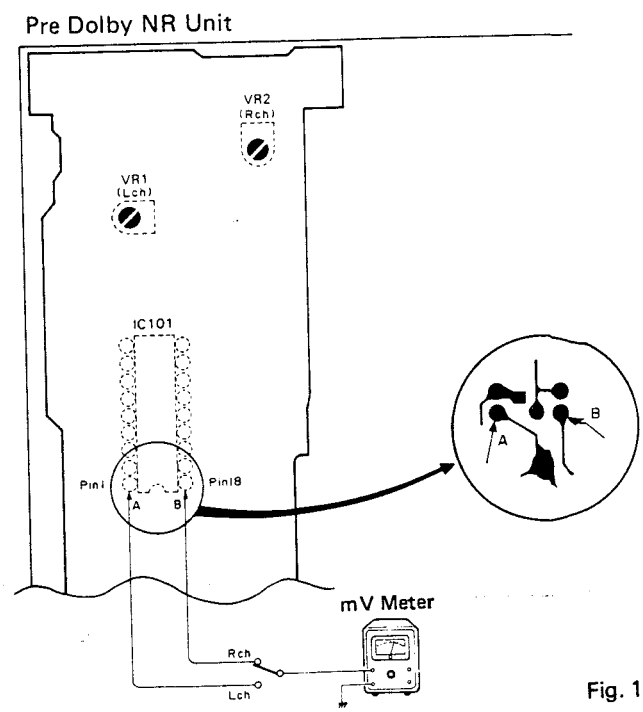

Fig. 19

6.4 ELECTRONIC VOLUME CONTROL ADJUSTMENT

• Connection Diagram

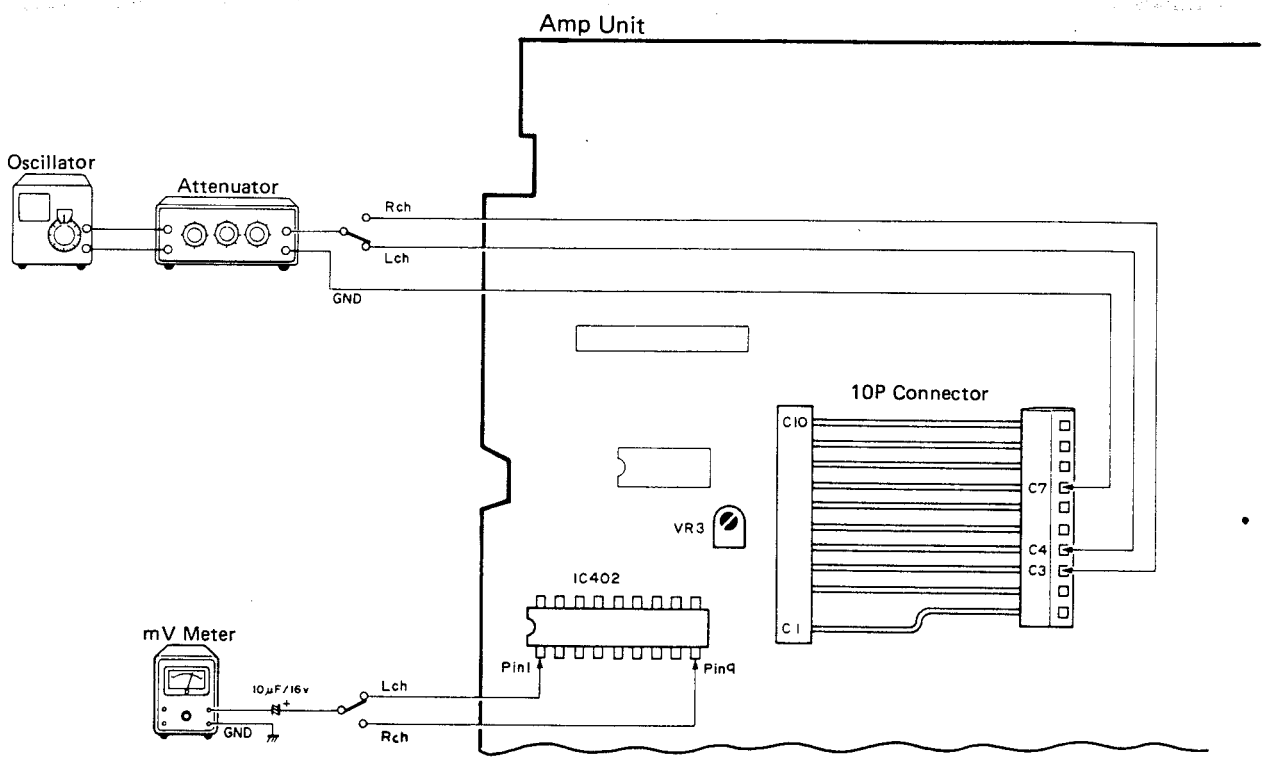

Fig. 20

• To Adjust

1. Disconnect the connector for the pre Dolby NR unit.
2. Apply a 1 kHz, −20 dB signal from the oscillator.
3. Turn VR3 clockwise as far as possible.
4. Press the Up button of the electronic volume to obtain the maximum volume.
5. Press the Down button four times, and adjust VR3 so that the output level is 1.5 ±1 dB less than the previous value (item 4).

• ICs and Transistors

2SD601
2SC2812
2SC2712
2SB710
2SB709
2SA1179
2SA1162

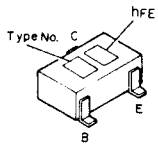

2SC945
2SC1815
2SC2001

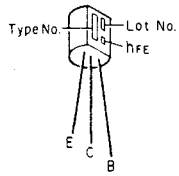

2SA1048

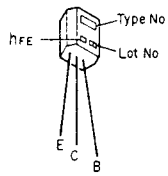

2SB562

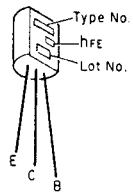

2SC1740LN

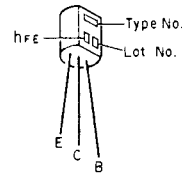

CHIP TRANSISTORS

Part No.	Indication (Type No., hFE)	Part No.	Indication (Type No., hFE)
2SA1162-SY	SY	2SB710-CQ	CQ
2SA1162-SG	SG	2SC2812-L4	L4
2SA1179-M5	M5	2SC2812-L5	L5
2SA1179-M6	M6	2SC2812-L6	L6
2SA1179-M7	M7	2SC2712-LG	LG
2SB709-AQ	AQ	2SC2712-LL	LL
2SB709-AR	AR	2SC2712-LY	LY
2SB709-AS	AS	2SD601-YQ	YQ
2SB710-CR	CR	2SD601-YR	YR
2SB710-CS	CS	2SD601-YS	YS

2SB942
2SD1267
2SD1276

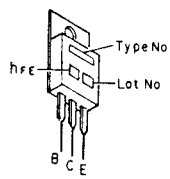

2SD734

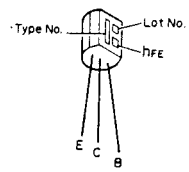

2SA1175

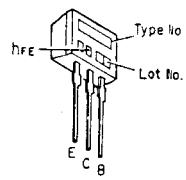

HA17358

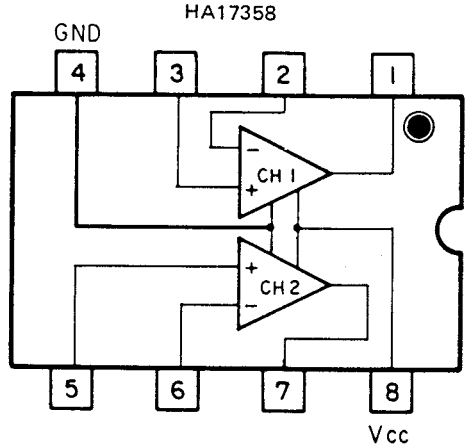

BA6209

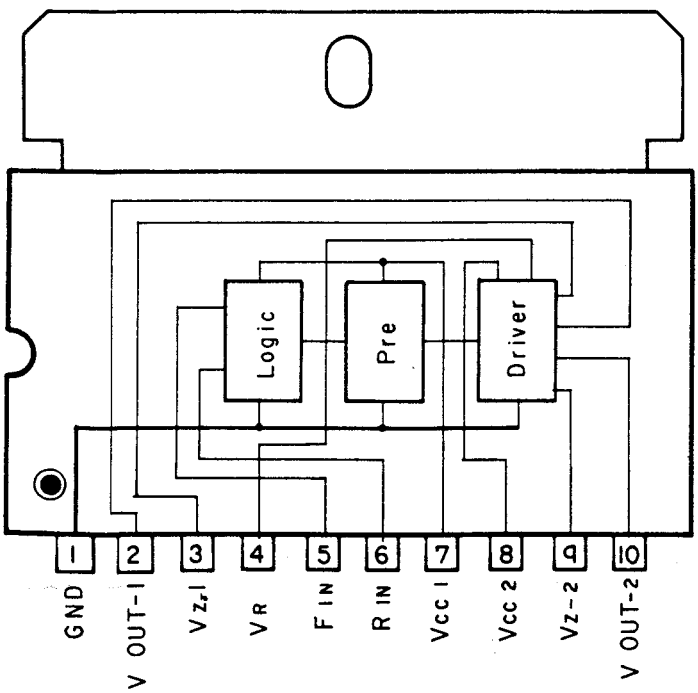

MB3106M

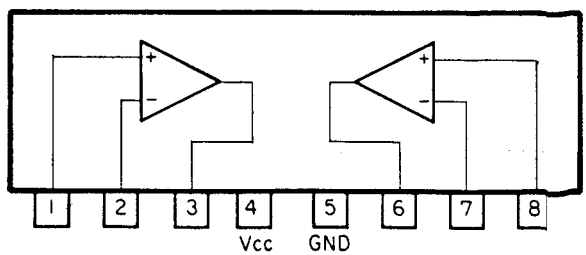

TC4066BF

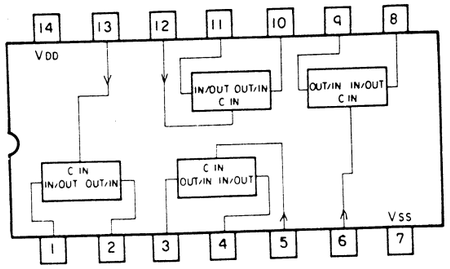

HA12047

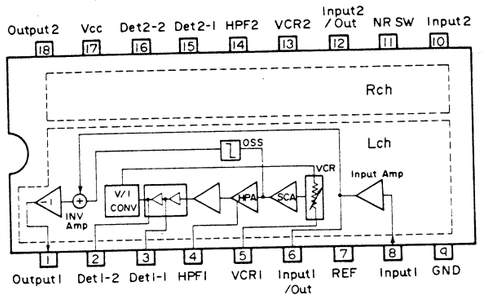

TA75558S

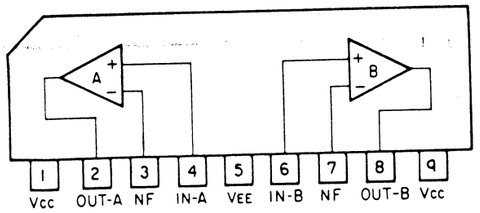

TC4069UBF

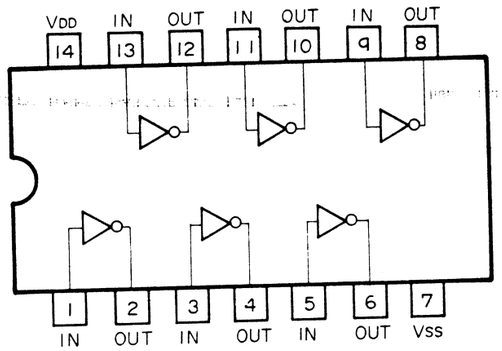

PA2014

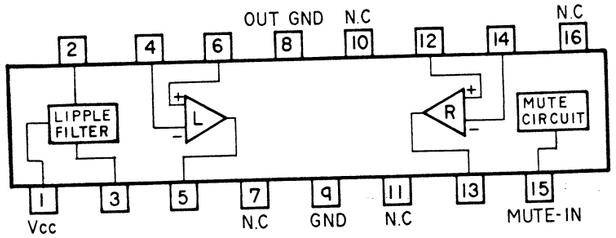

TC4011BF

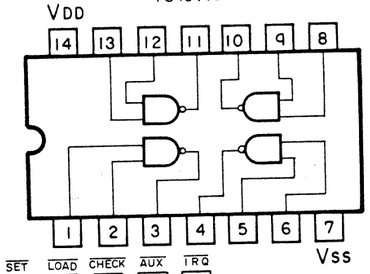

PA0005

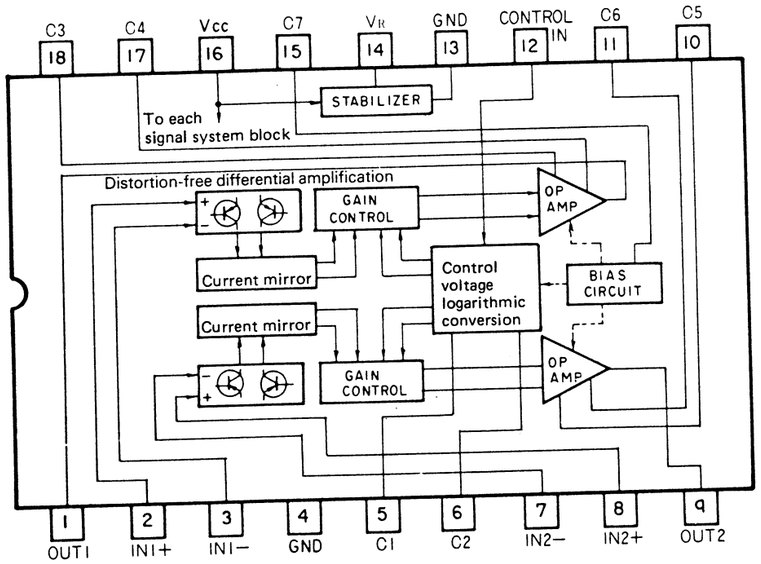

BA338

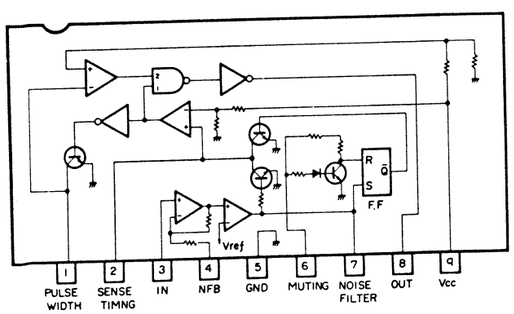

IR2403

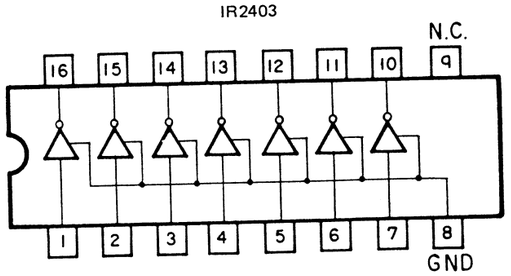

*PD3003

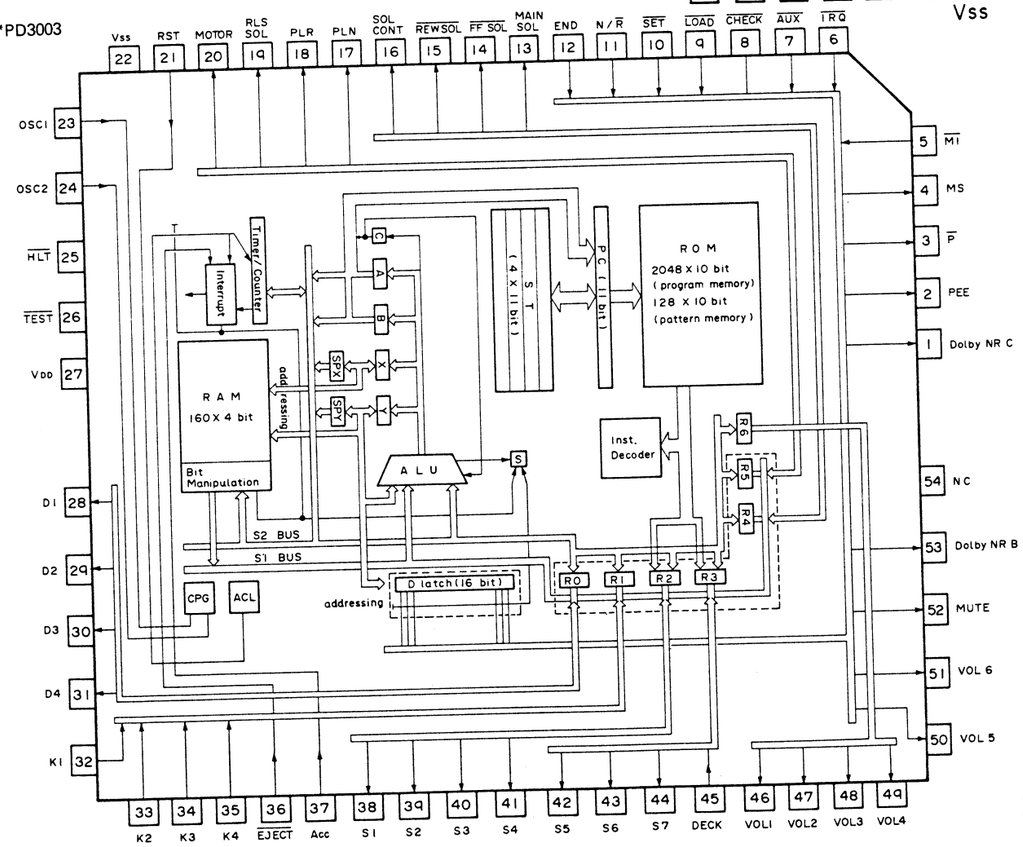

• PD3003

Pin	Pin nam
1	DOLBY NR C
2	PEE
3	$\overline{P}$
4	MS
5	$\overline{MI}$
6	$\overline{IRQ}$
7	$\overline{AUX}$
9	$\overline{LOAD}$
10	$\overline{SET}$
11	N/$\overline{R}$
12	END
13	MAIN SOL
14	$\overline{FF\ SO}$
15	$\overline{REW}$ SOL
16	SOL CONT
17	PLN
18	PLR
19	RLS

*IC's marked by *are MOS type*
Be careful in handling them be
liable to be damaged by electr

• **PD3003**

Pin	Pin name	Input/ Output	Function and Operation
1	DOLBY NR C	Output	Output pin for DOLBY NR C
2	PEE	Output	Output pin for PEE sound. When a key is pressed, this pin goes high generating a PEE sound.
3	$\overline{P}$	Output	$\overline{P}$ output pin. The low level in the play mode controls the MS circuit.
4	MS	Output	MS output pin. The high level in the MS or REPEAT mode controls the MS circuit.
5	$\overline{MI}$	Input	$\overline{MI}$ input pin. Music interval signals from the MS circuit is input to this pin.
6	$\overline{IRQ}$	Input	Input pin for timer interrupts. When low the deck is released. Next, after becoming high and the ATSC operation, it goes PLAY.
7	$\overline{AUX}$	Input	Input pin for the AUX mode. Active low. When this pin is low and ACC is on, the display and keys for volume control are enabled regardless of the deck status.
9	$\overline{LOAD}$	Input	Input pin for detecting when a cassette tape is inserted. Active low.
10	$\overline{SET}$	Input	Connected to the cassette loading detection switch. Active low. (When this pin goes low, the controller determines that a cassette tape has been loaded.)
11	[illegible]	Input	Input pin for the FWD/REW selection switch.
12	END	Input	END SENSE input in. Receives reel rotation pulses from the deck, and senses tape end from the absence of pulses.
13	MAIN SOL	Output	When a high level is output to this pin, the main solenoid is activated.
14	$\overline{FF\ SOL}$	Output	When a low level is output to this pin, the FF solenoid is activated.
15	$\overline{REW\ SOL}$	Output	When a low level is output to this pin, the REW solenoid is activated.
16	SOL CONT	Output	Output pin for solenoid protection. This pin allows application of a high voltage to solenoids initially, and a lower voltage after the pull occurs, thus protecting the solenoids. Active high.
17	PLN	Output	Normal output pin for the power loading motor. Becomes high when a cassette tape is loaded.
18	PLR	Output	Reverse output pin for the power loading motor. Becomes high when a cassette tape is loaded.
19	RLS SOL	Output	Control pin for the release solenoid. Active high.

Pin	Pin name	Input/ Output	Function and Operation
20	MOTOR	Output	"Off" while the cassette mechanism is in the eject or release state. Active high.
21	RST	Input	Initial reset pin. When a high level is input, the contents of the registers are cleared and the program starts execution.
22	V_{SS}		Connected to the ground.
23 24	OSC1 OSC2	Input	Clock pin. Generates 400kHz with a ceramic radiator and a capacitor.
27	V_{DD}		Power supply pin (5V)
28 ~ 31	D1~D4	Output	Output pin for key scanning and display.
32 ~ 35	K1~K4	Input	Key input pins used together with D1 to D4 to encode the key matrix.
36	$\overline{EJECT}$	Input	Eject key input pin. Receives a low level from the eject switch, and performs key-off release, bringing the deck into the "eject state."
37	ACC	Input	The status (on or off) of the accessory switch of the car is connected to this pin. Active high. When the accessory switch is on, the deck is operable; when off, inoperable.
38 ~ 44	S1~S7	Output	These pins, together with S1 to S7, provides matrixed data for the LED display.
45	DECK B/C	Input	Input pin for switching DECK B/C.
46 ~ 51	VOL1 ~ VOL6	Output	Six-bit output for the electronic volume control. Generates data (000000 to 111111) according to the input from the keys. This data is converted into an analog signal and controls the electronic volume control.
52	MUTE	Output	"On" when the accessory switch is turned on, and "Off" in the play mode. This signal is output during transitional periods to mute the circuit.
53	DOLBY NR B	Output	High when the Dolby NR B is on. The status is retained even after the accessory switch has been turned off, and the same state is resumed when the deck is used again.

**are MOS type.*
ndling them because they are very
aged by electrostatic induction.

7. SCHEMATIC CIRCUIT DIAGRAM

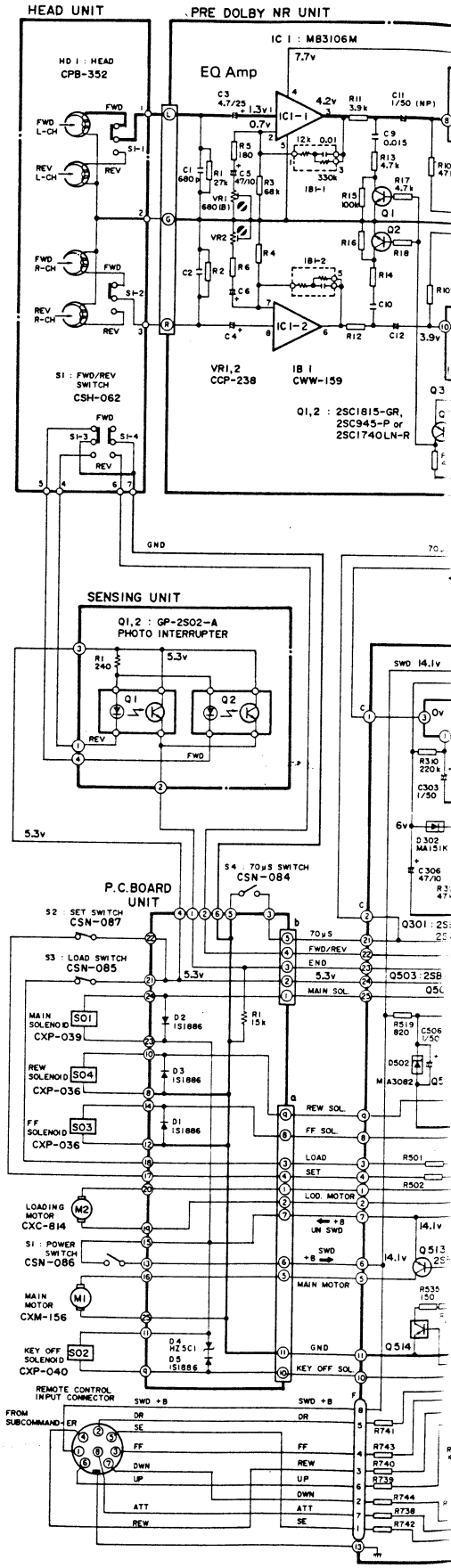

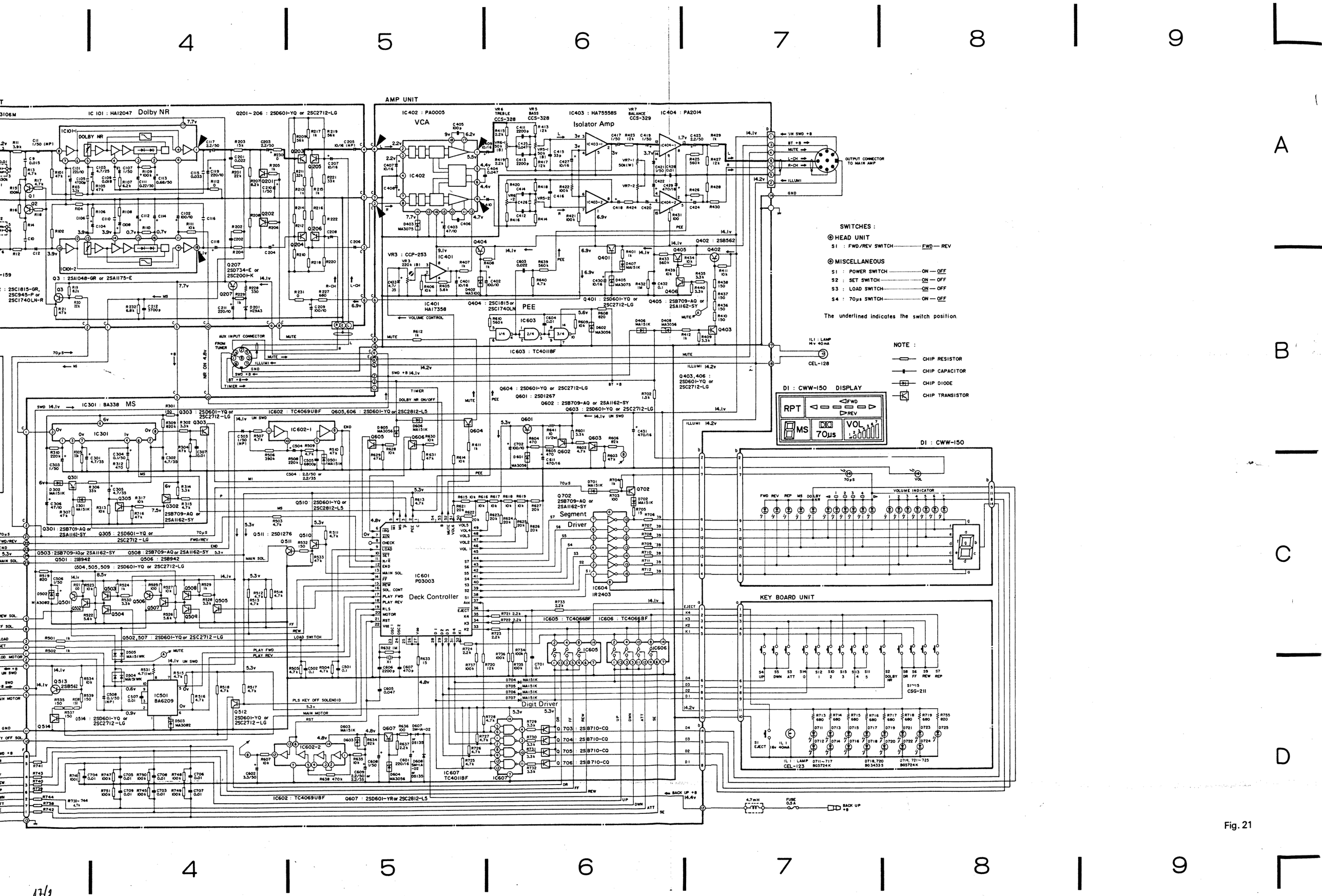
AMP UNIT
IC 101 : HA12047 Dolby NR
IC 402 : PA0005
VCA
IC 403 : HA75558S
Isolator Amp
IC 404 : PA2014
IC 301 : BA338 MS
IC 601
PD3003
Deck Controller
Segment Driver
IC 604
IR2403
Digit Driver
IC 501
BA6209
IC 401
HA17358
IC 603 : TC4011BF
IC 605 : TC4066BF
IC 606 : TC4066BF
IC 607
TC4011BF
IC 602 : TC4069UBF
Q 201 ~ 206 : 2SD601-YQ or 2SC2712-LG
Q 402 : 2SB562
Q 403, 406 : 2SD601-YQ or 2SC2712-LG
Q 404 : 2SC1815 or 2SC1740LN
Q 405 : 2SB709-AQ or 2SA1162-SY
Q 601 : 2SD1267
Q 602 : 2SB709-AQ or 2SA1162-SY
Q 603 : 2SD601-YQ or 2SC2712-LG
Q 604 : 2SD601-YQ or 2SC2712-LG
Q 605, 606 : 2SD601-YQ or 2SC2812-L5
Q 702 : 2SB709-AQ or 2SA1162-SY
Q 703 ~ 706 : 2SB710-CQ
Q 607 : 2SD601-YR or 2SC2812-L5
Q 301 : 2SB709-AQ or 2SA1162-SY
Q 305 : 2SD601-YQ or 2SC2712-LG
Q 510 : 2SD601-YQ or 2SC2812-L5
Q 511 : 2SD1276
Q 512 : 2SD601-YQ or 2SC2712-LG
Q 513 : 2SB562
Q 514 : 2SD601-YQ or 2SC2712-LG
Q 502, 507 : 2SD601-YQ or 2SC2712-LG
Q 503 : 2SB709-AQ or 2SA1162-SY
Q 508 : 2SB709-AQ or 2SA1162-SY
Q 501 : 2SB942
Q 506 : 2SB942
Q 504, 505, 509 : 2SD601-YQ or 2SC2712-LG
Q 3 : 2SA1048-GR or 2SA1175-E
Q 207 : 2SD734-E or 2SC2001-K
Q 404 : 2SC1815 or 2SC1740LN
OUTPUT CONNECTOR TO MAIN AMP
AUX INPUT CONNECTOR
FROM TUNER
VOLUME CONTROL
PEE
TIMER
DOLBY NR ON/OFF
LOAD SWITCH
PLS KEY OFF SOLENOID
MAIN MOTOR
MAIN SOL.
DI : CWW-150 DISPLAY
RPT
FWD
REV
MS
70μs
VOL
DI : CWW-150
VOLUME INDICATOR
KEY BOARD UNIT
CSG-211
CEL-123
CEL-128
IL 1 : LAMP 14v 40mA
4.7mH
FUSE 0.3A
BACK UP +B
SWITCHES :
HEAD UNIT
S1 : FWD/REV SWITCH ..... FWD — REV
MISCELLANEOUS
S1 : POWER SWITCH ..... ON — OFF
S2 : SET SWITCH ..... ON — OFF
S3 : LOAD SWITCH ..... ON — OFF
S4 : 70μs SWITCH ..... ON — OFF
The underlined indicates the switch position.
NOTE :
CHIP RESISTOR
CHIP CAPACITOR
CHIP DIODE
CHIP TRANSISTOR

Fig. 21

17/2

8. CONNECTION DIAGRAM

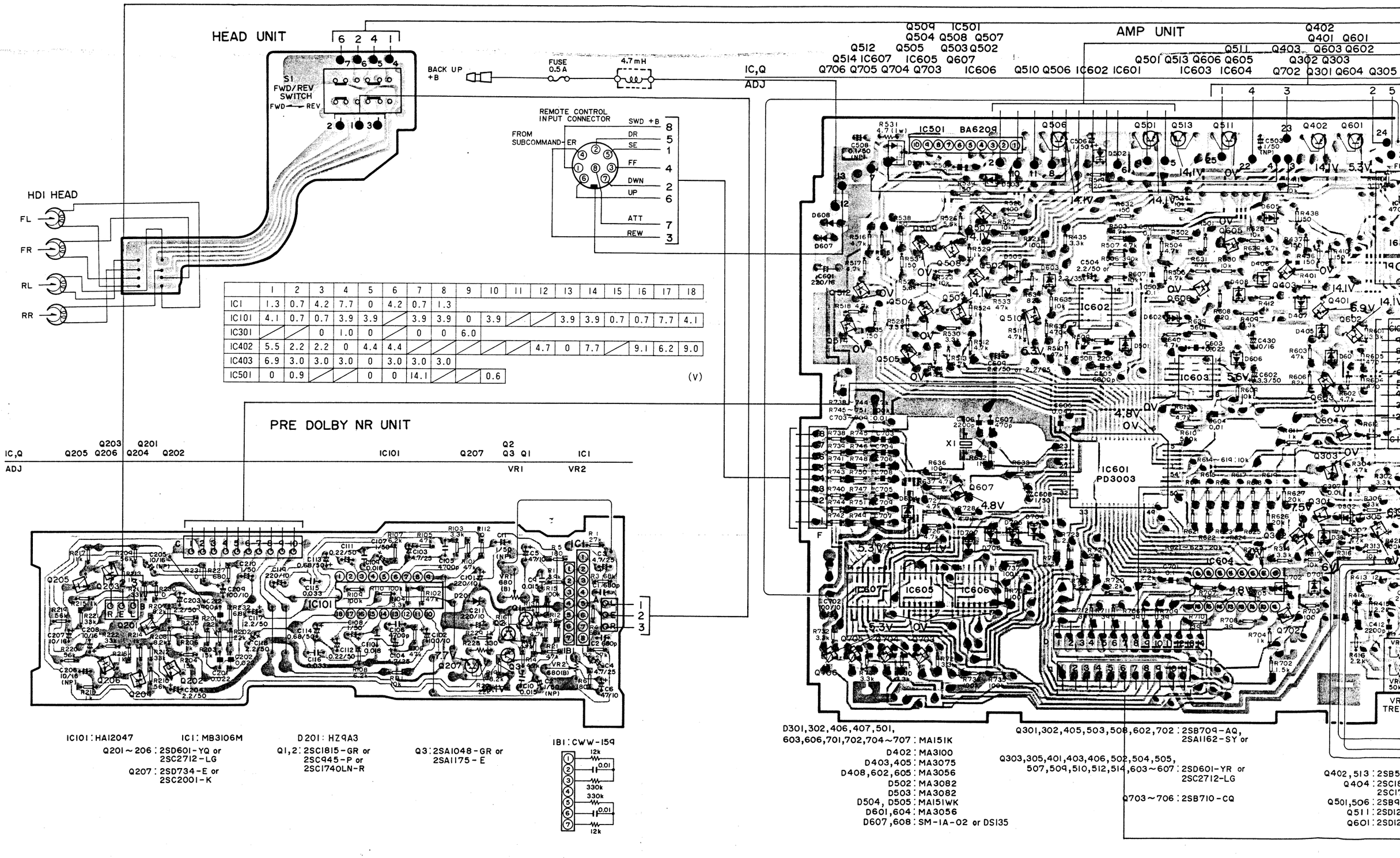

	1	2	3	4	5	6	7	8	9	10	11	12	13	14	15	16	17	18
IC1	1.3	0.7	4.2	7.7	0	4.2	0.7	1.3										
IC101	4.1	0.7	0.7	3.9	3.9	/	3.9	3.9	0	3.9	/	/	3.9	3.9	0.7	0.7	7.7	4.1
IC301	/	/	0	1.0	0	/	0	0	6.0									
IC402	5.5	2.2	2.2	0	4.4	4.4	/	/	/	/	/	4.7	0	7.7	/	9.1	6.2	9.0
IC403	6.9	3.0	3.0	3.0	0	3.0	3.0	3.0										
IC501	0	0.9	/	/	0	0	14.1	/	/	0.6								

(V)

IC101 : HA12047 IC1 : MB3106M D201 : HZ9A3

Q201 ~ 206 : 2SD601-YQ or 2SC2712-LG

Q207 : 2SD734-E or 2SC2001-K

Q1, 2 : 2SC1815-GR or 2SC945-P or 2SC1740LN-R

Q3 : 2SA1048-GR or 2SA1175-E

IB1 : CWW-159

D301, 302, 406, 407, 501, 603, 606, 701, 702, 704 ~ 707 : MA151K

D402 : MA3100

D403, 405 : MA3075

D408, 602, 605 : MA3056

D502 : MA3082

D503 : MA3082

D504, D505 : MA151WK

D601, 604 : MA3056

D607, 608 : SM-1A-02 or DS135

Q301, 302, 405, 503, 508, 602, 702 : 2SB709-AQ, 2SA1162-SY or

Q303, 305, 401, 403, 406, 502, 504, 505, 507, 509, 510, 512, 514, 603 ~ 607 : 2SD601-YR or 2SC2712-LG

Q703 ~ 706 : 2SB710-CQ

Q402, 513 : 2SB5

Q404 : 2SC1

2SC1

Q501, 506 : 2SB9

Q511 : 2SD12

Q601 : 2SD12

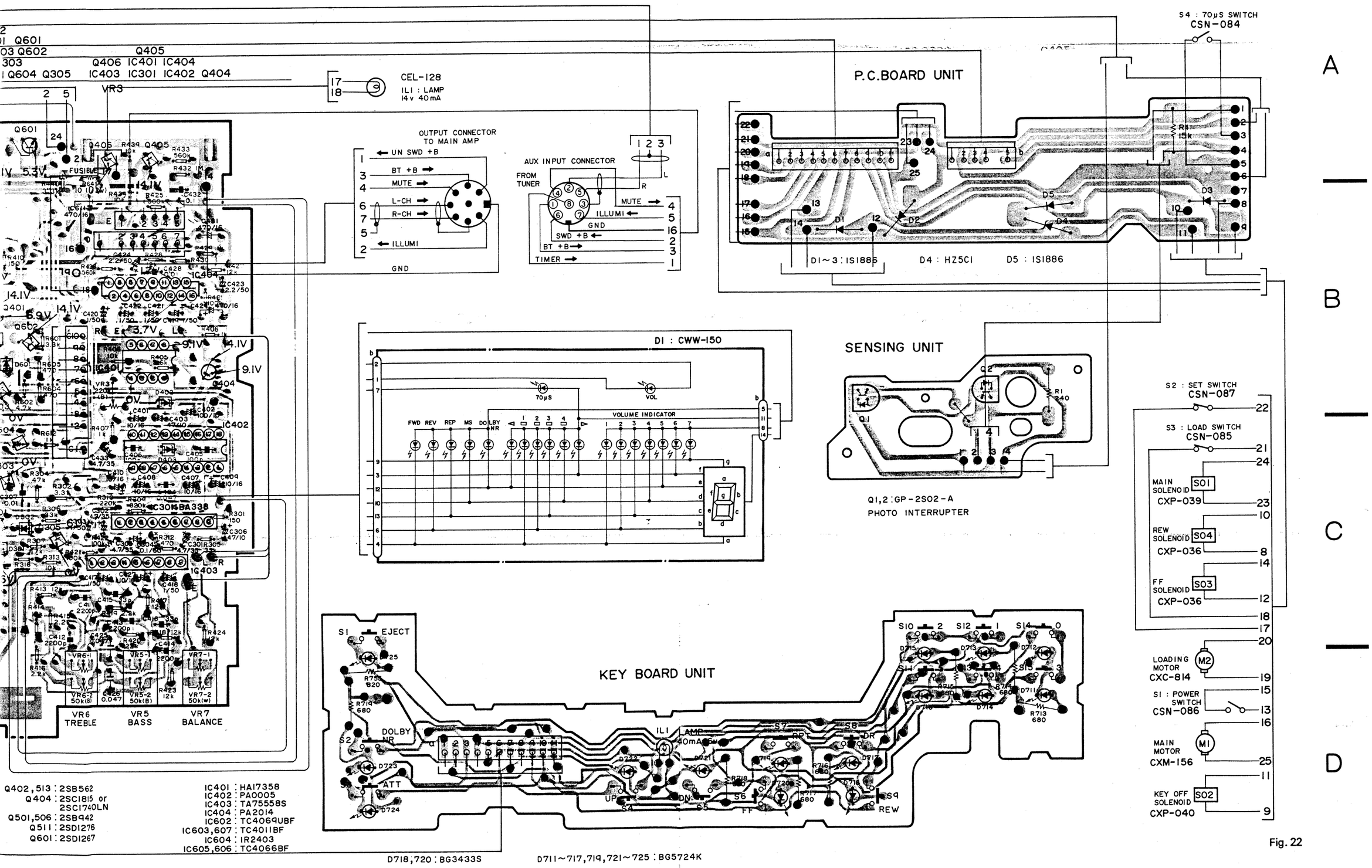
CEL-128
ILI : LAMP
14v 40mA
OUTPUT CONNECTOR
TO MAIN AMP
UN SWD +B
BT +B
MUTE
L-CH
R-CH
ILLUMI
GND
AUX INPUT CONNECTOR
FROM
TUNER
MUTE
ILLUMI
GND
SWD +B
BT +B
TIMER
P.C.BOARD UNIT
D1~3 : IS1886
D4 : HZ5CI
D5 : IS1886
S4 : 70μS SWITCH
CSN-084
DI : CWW-150
70μS
VOL
VOLUME INDICATOR
FWD REV REP MS DOLBY NR
SENSING UNIT
Q1,2 : GP-2S02-A
PHOTO INTERRUPTER
S2 : SET SWITCH
CSN-087
S3 : LOAD SWITCH
CSN-085
MAIN SOLENOID S01
CXP-039
REW SOLENOID S04
CXP-036
FF SOLENOID S03
CXP-036
LOADING MOTOR M2
CXC-814
SI : POWER SWITCH
CSN-086
MAIN MOTOR M1
CXM-156
KEY OFF SOLENOID S02
CXP-040
KEY BOARD UNIT
S1 EJECT
DOLBY NR
ATT
UP
DN
FF
REW
VR6 TREBLE
VR5 BASS
VR7 BALANCE
Q402,513 : 2SB562
Q404 : 2SC1815 or 2SC1740LN
Q501,506 : 2SB942
Q511 : 2SD1276
Q601 : 2SD1267
IC401 : HA17358
IC402 : PA0005
IC403 : TA75558S
IC404 : PA2014
IC602 : TC4069UBF
IC603,607 : TC4011BF
IC604 : IR2403
IC605,606 : TC4066BF
D718,720 : BG3433S
D711~717,719,721~725 : BG5724K

Fig. 22

9. CABINET EXPLODED VIEW

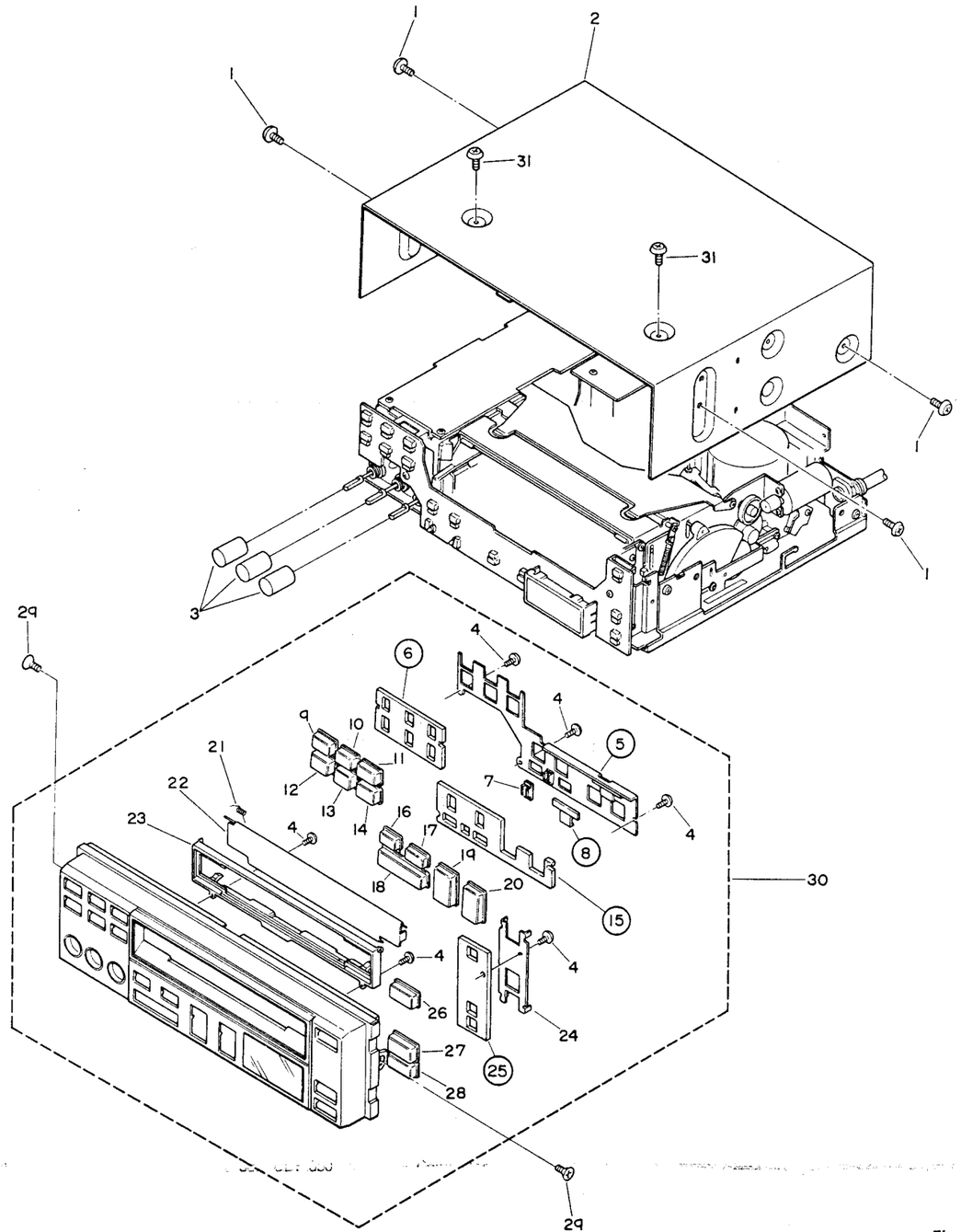

Fig. 23

• **Parts List**

NOTE:

- *For your Parts Stock Control, the fast moving items are indicated with the marks ★★ and ★.*
  ★★: GENERALLY MOVES FASTER THAN ★.
  This classification shall be adjusted by each distributor because it depends on model number, temperature, humidity, etc.
- *Parts whose parts numbers are omitted are subject to being not supplied.*

Mark	No.	Part No.	Description
	1.	CBA-121	Screw
	2.	CXD-296	Case Unit
★	3.	CAA-451	Knob
	4.	BRZ20P040FMC	Screw
	5.		Holder
	6.		Spacer
	7.	CNW-558	Holder
	8.		Holder
★	9.	CAC-772	Button
★	10.	CAC-773	Button
★	11.	CAC-774	Button
★	12.	CAC-775	Button
★	13.	CAC-776	Button
★	14.	CAC-777	Button
	15.		Spacer
★	16.	CAC-567	Button
★	17.	CAC-576	Button
★	18.	CAC-566	Button
★	19.	CAC-580	Button
★	20.	CAC-579	Button
	21.	CBH-543	Spring
	22.	CAT-153	Door
	23.	CNS-935	Lens
	24.	CNF-826	Holder
	25.		Spacer
★	26.	CAC-577	Button
★	27.	CAC-583	Button
★	28.	CAC-578	Button
	29.	CMZ30P050FMC	Screw
	30.	CXC-918	Grille Assy
	31.	BMZ26P050FCR	Screw

10. CHASSIS EXPLODED VIEW

• **Parts List**

Mark	No.	Part No.	Description
	1.	BMZ26P040FMC	Screw
	2.	CKS-268	Plug
	3.	CKS-275	Plug
	4.	CKS-312	Plug
	5.	CDF-390	Connector
	6.	BMZ20P040FMC	Screw
★★	7.	CSG-211	Switch
★★	8.	CEL-128	Lamp, 14V 40mA
★	9.	BG5724K	LED
	10.		Spacer
★	11.	BG3433S	LED
★	12.	CWW-150	LED
	13.		Frame
	14.		Spacer
	15.		P.C. Board
★★	16.	CEL-123	Lamp, 16V 40mA
	17.	CNW-560	Holder
★★	18.	CCS-329	Volume, 50kΩ(W)
★★	19.	CCS-328	Volume, 50kΩ(B)
	20.	CBA-066	Nut
	21.	CDF-365	Cord
	22.		Spacer
	23.	CNL-337	P.C. Board
	24.	BMZ26P050FMC	Screw
	25.		Holder
	26.		Heat Sink
★★	27.	BA6209	IC
	28.	CNM-729	Spacer
	29.		Insulator
	30.		Chassis
	31.	BMZ30P060FMC	Screw
	32.	CWK-314	Amp Assy
	33.	CDF-555	Connector
	34.	CDF-562	Connector
	35.	CDF-554	Connector
	36.	CDF-345	Connector
	37.	CDF-351	Connector
	38.	CDF-350	Connector
	39.	CXK-021	Cassette Mechanism Unit
	40.		Insulator
	41.		Cap

• Chassis

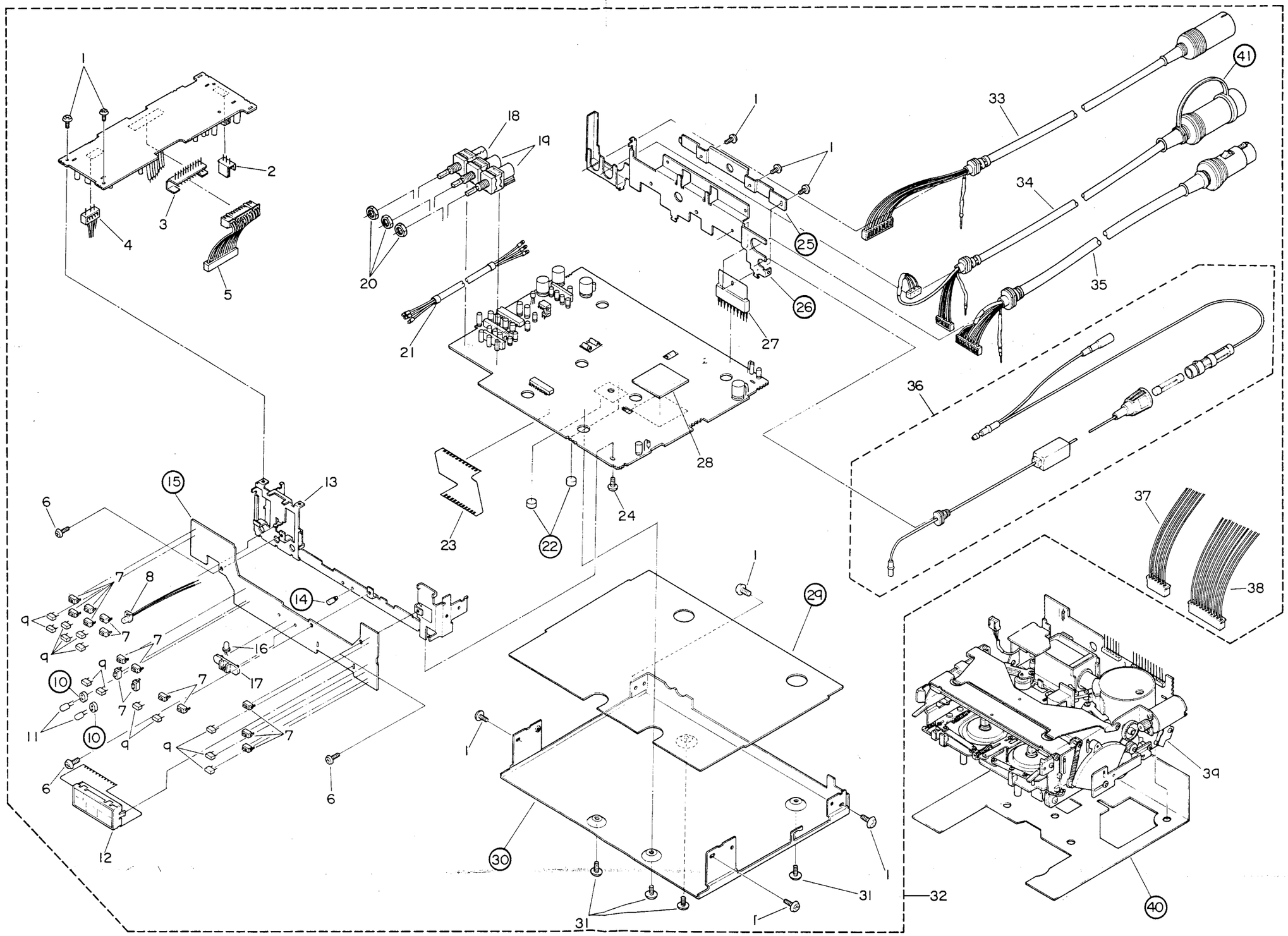

Fig. 24

11. CASSETTE MECHANISM EXPLODED VIEW

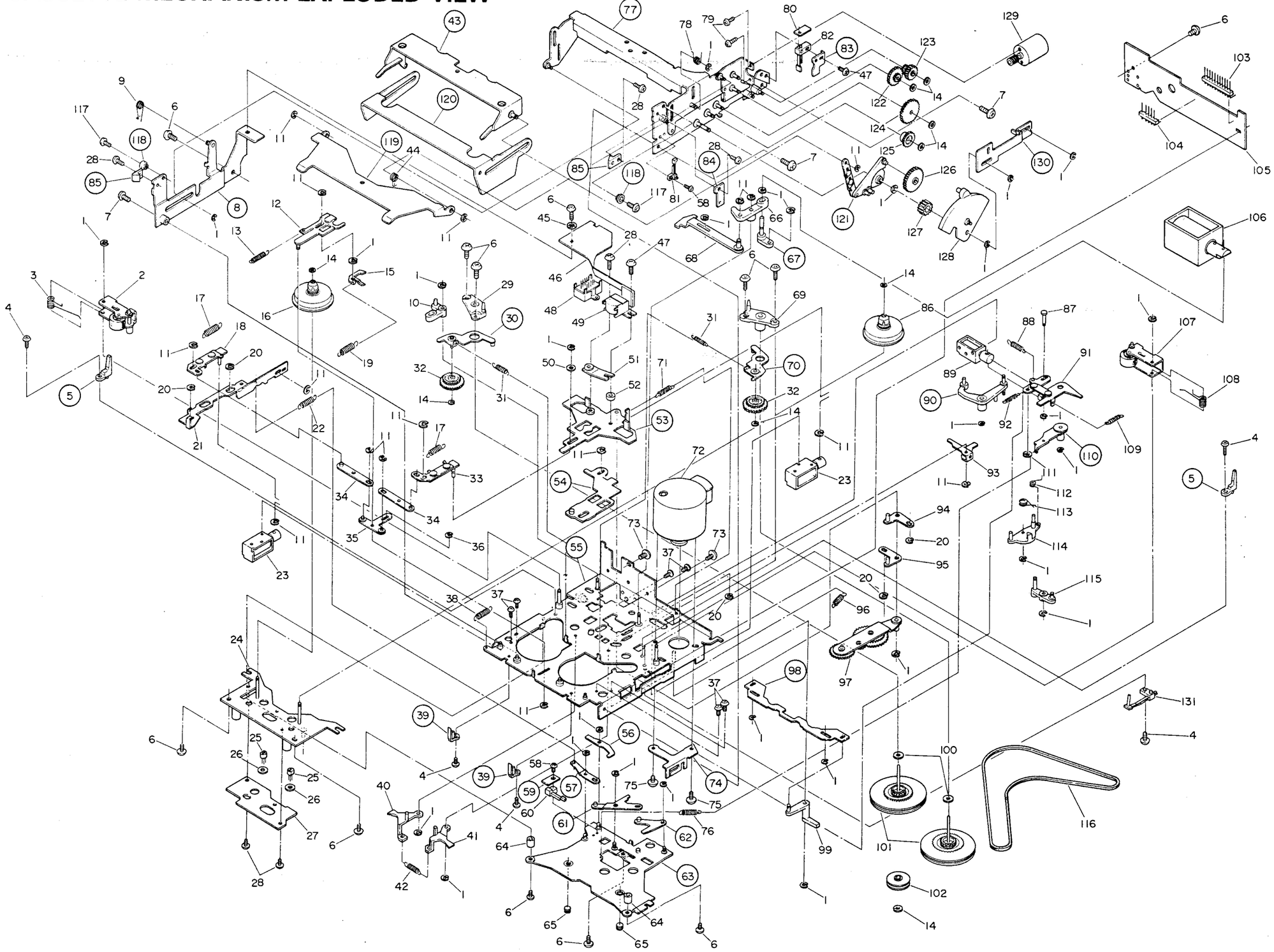

Fig. 25

• Parts Li

Mark	No.
	1
★★	2
	3
	4
	5
	6
	7
	8
	9
	10
	11
	12
	13
	14
	15
★★	16
	17
	18
	19
	20
	21
	22
★	23
	24
★★	25
	26
	27
	28
	29
	30
	31
	32
	33
	34
	35
	36
	37
	38
	39
	40
	41
	42
	43
	44
	45
	46
	47
★★	48
★★	49

• Parts List

Mark	No.	Part No.	Description
	1.	YE20FUC	Washer
★★	2.	CXB-994	Roller Unit
	3.	CBH-561	Spring
	4.	BMZ20P040FMC	Screw
	5.		Guide
	6.	BMZ26P040FMC	Screw
	7.	BMZ26P060FMC	Screw
	8.		Bracket Unit
	9.	CBH-716	Spring
	10.	CNV-987	Arm
	11.	YE15FUC	Washer
	12.	CXC-667	Lever Unit
	13.	CBH-712	Spring
	14.	CBF-045	Washer
	15.	CNF-592	Cam
★★	16.	CXD-037	Reel Unit
	17.	CBH-709	Spring
	18.	CXC-665	Lever Unit
	19.	CBH-711	Spring
	20.	YE25FUC	Washer
	21.	CXC-675	Lever Unit
	22.	CBH-713	Spring
★	23.	CXP-036	Solenoid (FF, REW)
	24.	CXC-656	Sub Chassis
★★	25.	GP-2S02-A or	Photo Interrupter
		GP-2S02-B	
	26.	CBF-141	Washer
	27.	CNL-250	P.C. Board
	28.	BMZ20P030FMC	Screw
	29.	CNR-129	Bearing
	30.		Arm Unit
	31.	CBH-707	Spring
	32.	CNW-431	Gear
	33.	CXC-664	Lever Unit
	34.	CXC-666	Lever Unit
	35.	CXC-668	Arm Unit
	36.	YE12FUC	Washer
	37.	BMZ20P025FMC	Screw
	38.	CBH-714	Spring
	39.		Guide
	40.	CNW-442	Lever
	41.	CNW-443	Lever
	42.	CBH-710	Spring
	43.		Holder Unit
	44.	CBH-748	Spring
	45.	WH26FUC	Washer
	46.	CNL-249	P.C. Board
	47.	BMZ20P060FMC	Screw
★★	48.	CSH-062	Switch (FWD/REV)
★★	49.	CPB-352	Head
	50.	CNF-091	Washer
	51.	CBL-178	Spring
	52.	CNW-064	Rubber
	53.		Head Plate
	54.		Lever Unit
	55.		Chassis
	56.		Arm
	57.		Arm
	58.	HBA-165	Screw
	59.		P.C. Board
★★	60.	CSN-084	Switch (70μs)
	61.		Arm Unit
	62.		Arm Unit
	63.		Holder Unit
	64.	CLB-382	Spacer
	65.	CNV-984	Screw
	66.	CNV-947	Arm
	67.		Lever
	68.	CXC-055	Lever Unit
	69.	CNR-128	Bearing
	70.		Arm Unit
	71.	CBH-706	Spring
★★	72.	CXM-156	Motor (Main)
	73.	PMS26P040FUC	Screw
	74.		Bracket
	75.	PMS26P030FMC	Screw
	76.	CBH-705	Spring
	77.		Side Frame Unit
	78.	CBH-755	Spring
	79.	HBA-173	Screw
	80.	CNX-424	P.C. Board
★★	81.	CSN-085	Switch (Loading)
★★	82.	CSN-086	Switch (Power)
	83.		Cover
	84.		P.C. Board
	85.		Guide
★★	86.	CXD-038	Reel Unit
	87.	CLB-359	Shaft
	88.	CBH-704	Spring
★	89.	CXP-040	Solenoid (Key Off)
	90.		Arm
	91.	CXC-672	Cam Unit
	92.	CBH-701	Spring
	93.	CNF-595	Arm
	94.	CXC-670	Arm Unit
	95.	CXC-669	Arm Unit
	96.	CBH-703	Spring
	97.	CXC-659	Gear Unit
	98.		Lever
	99.	CNW-445	Arm
	100.	CBF-111	Washer
	101.	CNR-159	Flywheel
	102.	CLB-381	Pulley
	103.	CKS-159	Plug (11P)
	104.	CKS-055	Plug (5P)
	105.	CNL-248	P.C. Board
★	106.	CXP-039	Solenoid (Main)
★★	107.	CXB-993	Roller Unit
	108.	CBH-560	Spring
	109.	CBH-702	Spring
	110.		Cam Unit
	111.	CBF-139	Washer
	112.	CBH-525	Spring
	113.	CBH-526	Spring
	114.	CNW-551	Arm
	115.	CXB-919	Arm Unit
★★	116.	CNT-098	Belt
	117.	CMZ20P040FMC	Screw
	118.		Bush
	119.		Arm
	120.		Arm Unit
	121.		Arm Unit
	122.	CNW-579	Gear
	123.	CNW-578	Gear
	124.	CNW-448	Gear
	125.	CNW-449	Gear
	126.	CNW-452	Gear
	127.	CNW-453	Gear
	128.	CXC-961	Gear Unit
★★	129.	CXC-814	Motor Unit (Loading)
	130.		Lever
★★	131.	CSN-073	Switch (Set)

12. ELECTRICAL PARTS LIST

NOTE:

When ordering resistors, first convert resistance values into code form as shown in the following examples.

Ex. 1 *When there are 2 effective digits (any digit apart from 0), such as 560 ohm and 47k ohm (tolerance is shown by J = 5%, and K = 10%).*

560Ω *56×10^1* *561* ..... *RD1/4PS 5 6 1 J*

47kΩ *47×10^3* *473* ..... *RD1/4PS 4 7 3 J*

0.5Ω *0R5* ..... *RN2H 0 R 5 K*

1Ω *010* ..... *RS1P 0 1 0 K*

Ex. 2 *When there are 3 effective digits (such as in high precision metal film resistors).*

5.62kΩ *562×10^1* ..... *RN1/4SR 5 6 2 1 F*

- *For your Parts Stock Control, the fast moving items are indicated with the marks ★★ and ★.*
  ★★: GENERALLY MOVES FASTER THAN ★.
  This classification shall be adjusted by each distributor because it depends on model number, temperature, humidity, etc.
- *Parts whose parts numbers are omitted are subject to being not supplied.*

Amp Unit

MISCELLANEOUS

Mark	Symbol & Description	Part No.
★★	IC301	BA338
★★	IC401	HA17358
★★	IC402	PA0005
★★	IC403	TA75558S
★★	IC404	PA2014
★★	IC501	BA6209
★★	IC601	PD3003
★★	IC602	TC4069UBF
★★	IC603, IC607	TC4011BF
★★	IC604	IR2403
★★	IC605, IC606	TC4066BF
★★	Q301, Q302, Q405, Q503, Q508, Q602, Q702 Chip Transistor	2SB709-AQ or 2SB709-AR or 2SB709-AS or 2SA1162-SG or

Mark	Symbol & Description	Part No.
		2SA1162-SY or
		2SA1179-M5 or
		2SA1179-M6 or
		2SA1179-M7
★★	Q303, Q510, Q605, Q606	2SD601-YQ or
	Chip Transistor	2SD601-YR or
		2SD601-YS or
		2SC2812-L4 or
		2SC2812-L5 or
		2SC2812-L6 or
		2SC2712-LG or
		2SC2712-LL or
		2SC2712-LY
★★	Q305, Q401, Q403, Q406,	2SD601-YQ or
	Q502, Q504, Q505, Q507,	2SD601-YR or
	Q509, Q512, Q514, Q603, Q604	2SD601-YS or
	Chip Transistor	2SC2712-LG or
		2SC2712-LL or
		2SC2712-LY
★★	Q402, Q513	2SB562
★★	Q404	2SC1815 or
		2SC1740LN
★★	Q501, Q506	2SB942
★★	Q511	2SD1276
★★	Q601	2SD1267
★★	Q607 Chip Transistor	2SD601-YR or
		2SD601-YS or
		2SC2812-L5 or
		2SC2812-L6 or
		2SC2712-LG or
		2SC2712-LL
★★	Q703 — Q706 Chip Transistor	2SB710-CQ or
		2SB710-CR or
		2SB710-CS
★	D301, D302, D406, D407, D501,	MA151K
	D603, D606, D701, D702,	
	D704 — D707 Chip Diode	
★	D402 Chip Diode	MA3100-L
★	D403, D405 Chip Diode	MA3075-M
★	D408, D602, D605	MA3056-H or
	Chip Diode	MA3056-L or
		MA3056-M
★	D502 Chip Diode	MA3082-H or
		MA3082-M
★	D503 Chip Diode	MA3082-M
★	D504, D505 Chip Diode	MA151WK
★	D601, D604 Chip Diode	MA3056-L
★	D607, D608	SM-1A-02 or
		DS135-C or
		DS135-D
★★	VR3 Semi-fixed, 220kΩ(B)	CCP-253
★★	VR5, VR6 Volume, 50kΩ(B)	CCS-328
★★	VR7 Volume, 50kΩ(W)	CCS-329
	X1 Ceramic Resonator	CSS-027

RESISTORS

Mark	Symbol & Description	Part No.
	R301, R302, R304 — R307, R309,	RS1/8S□□□J
	R310, R312 — R317, R401,	
	R405 — R421, R423 — R440,	
	R501 — R519, R521 — R530,	
	R532 — R535, R537 — R539,	
	R601 — R619, R621 — R640,	
	R702 — R712, R720 — R751	
	Chip Resistor	
	R422	RD1/4VM□□□J
	R531	RN1P□□□J
	R641, 10Ω1/4W	HCN-107
	R303, R308, R311,	VACANT
	R402 — R404, R520, R536,	
	R620, R701, R713 — R719	

CAPACITORS

Mark	Symbol & Description	Part No.
	C301, C302, C305, C433	CEA4R7M35LL
	C303, C417 — C422	CEA010M50LL
	C304	CEA0R1M50LL
	C306, C403	CEA470M10L2
	C307, C428, C507, C604,	CKSYB103K50
	C703 — C707 Chip Capacitor	
	C308	VACANT
	C401, C427	CEA100M16LL
	C402, C702	CEA101M10L2
	C404, C605 Chip Capacitor	CKSYF473Z50
	C405, C406, Chip Capacitor	CCSSL101J50
	C407 — C410	CEA100M16L2
	C411 — C414, C606 Chip Capacitor	CKSYB222K50
	C415, C416 Chip Capacitor	CCSCH330J50
	C423, C424	CEA2R2M50LL
	C425, C426	CQMA473J50L
	C429, C431, C611	CEA471M16L2
	C430	CEA100M16LS
	C432, C501, C502, C701	CKSYF104Z25
	Chip Capacitors	
	C503	CEA010M50NPLL
	C504, C609	CEA2R2M50LS or
		CEA2R2M35LS
	C505 Chip Capacitor	CKSYB682K50
	C506	CEA010M50L2
	C508	CEA0R1M50NPLL
	C601	CEA221M16L
	C602	CEA3R3M50LS
	C603 Chip Capacitor	CKSYB223K25
	C607 Chip Capacitor	CKSYB471K50
	C608	CEA010M50LS
	C708, C709 Chip Capacitor	CKSYB103K50

Pre Dolby NR Unit

MISCELLANEOUS

Mark	Symbol & Description	Part No.
★★	IC1	MB3106M
★★	IC101	HA12047
★★	Q1, Q2	2SC1815 or
		2SC945 or
		2SC1740LN
★★	Q3	2SA1048 or
		2SA1175
★★	Q201 — Q206	2SD601-YQ or
	Chip Transistor	2SD601-YR or
		2SD601-YS or
		2SC2712-LG or
		2SC2712-LL or
		2SC2712-LY or
		2SC2812-L4 or
		2SC2812-L5 or
		2SC2812-L6
★★	Q207	2SD734 or
		2SC2001
★	D201	HZ9A3
	IB1	CWW-159
★★	VR1, VR2 Semi-fixed, 680Ω(B)	CCP-238

RESISTORS

Mark	Symbol & Description	Part No.
	R1 — R6, R11 — R21, R101 — R112,	RS1/8S□□□J
	R201 — R222, R227, R229 — R232	
	Chip Resistor	
	R228	RD1/4VM□□□J
	R7 — R10, R223 — R226	VACANT

CAPACITORS

Mark	Symbol & Description	Part No.
	C1, C2	CKDYB681K50L
	C3, C4, C103, C104	CEANL4R7M25LL
	C5, C6	CEA470M10L2
	C7, C8	VACANT
	C9, C10	CQMA153J50L
	C11, C12	CEA010M50NPLL
	C101, C119, C211	CEA221M10L2
	C102, C209	CEA101M10L2
	C105, C106	CQMA472J50L
	C107, C108	CEA010M50L2
	C109, C110	CQMA183J50L
	C111, C112	CEAR22M50LL
	C113, C114	CEAR68M50LL
	C115, C116	CQMA333J50L
	C117, C118, C203, C204	CEA2R2M50L2
	C201, C202 Chip Capacitor	CKSYB223K25
	C205, C206	CEA100M16NPLL
	C207, C208	CEA100M16L2
	C210	CEA010M50LL
	C212 Chip Capacitor	CKSYB392K50

Key Board Unit

Mark	Symbol & Description	Part No.
★	D711 — D717, D719, D721 — D725	BG5724K
	LED	
★	D718, D720 LED	BG3433S
★★	S1 — S15 Switch	CSG-211
★★	IL1 Lamp 16V 40mA	CEL-123
	R713 — R719, R755	RD1/4PM□□□J

Head Unit

Mark	Symbol & Description	Part No.
★★	HD1 Head	CPB-352
★★	S1 Switch (FWD/REV)	CSH-062

Sensing Unit

Mark	Symbol & Description	Part No.
★★	Q1, Q2 Photo Interrupter	GP-2S02-A or
		GP-2S02-B
	R1	RD1/4PM□□□J

P.C. Board Unit

Mark	Symbol & Description	Part No.
★	D1 — D3, D5	1S1886
★	D4	HZ5C1
	R1	RD1/4PM□□□J

Miscellaneous Parts List

Mark	Symbol & Description	Part No.
★	D1 LED	CWW-150
★★	S1 Switch (POWER)	CSN-086
★★	S2 Switch (SET)	CSN-087
★★	S3 Switch (LOAD)	CSN-085
★★	S4 Switch (70μs)	CSN-084
★★	M1 Motor (MAIN)	CXM-156
★★	M2 Motor (LOAD)	CXC-814
★	SO1 Solenoid (MAIN)	CXP-039
★	SO2 Solenoid (KEY OFF)	CXP-040
★	SO3, SO4 Solenoid (FF, REW)	CXP-036
★★	IL1 Lamp 14V 40mA	CEL-128

13. PACKING METHOD

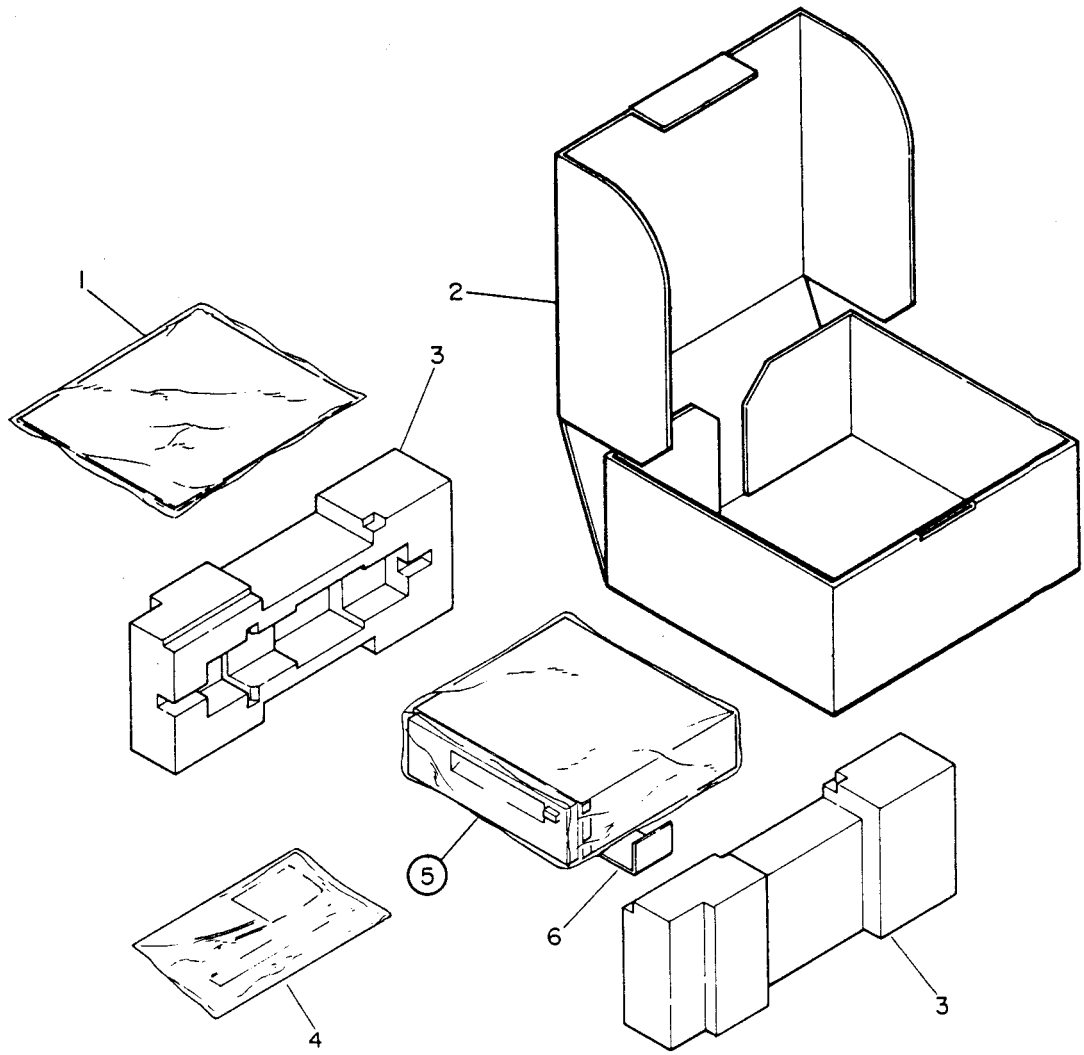

Fig. 26

• Parts List

Mark	No.	Part No.	Description
	1.	CRD-476	Owner's Manual
		CRD-477	Owner's Manual
			Card
			Card
	2.	CHD-604	Carton
	3.	CHC-880	Styrofoam
	4.	CEA-727	Accessory Assy
	4-1.	CDE-437	Cord
	4-2.		Screw Kit
	4-2-1.	B70-055-A	Washer faced Nut 4φ×4.5t
	4-2-2.	B70-056-A	Nut
	4-2-3.	CBA-028	Screw for Strap
	4-2-4.	B20-013-A	Spring Washer
	4-2-5.	CBA-102	Screw
	4-2-6.	HMF40P080FMC	Screw
	4-2-7.	CNN-058	Spacer
	4-2-8.		Double-sided Seal
	4-3.	CNF-111	Strap
	5.		Cover
	6.	CNB-723	Mounting Bracket